CORRECTIVE ACTION NUMBER
110

28 NON-FUNCTIONING DIRECTIONAL LIGHT
K08-E-501 SCALE: N.T.S.

CORRECTIVE ACTION NUMBER
125

29 MISSING RECEPTACLE COVER
K08-E-507 K08-E-508 SCALE: N.T.S.

CORRECTIVE ACTION NUMBER
125

30 MISSING RECEPTACLE COVER
K08-E-508 SCALE: N.T.S.

CORRECTIVE ACTION NUMBER
125

31 MISSING RECEPTACLE COVER
K08-E-508 SCALE: N.T.S.

CORRECTIVE ACTION NUMBER
125

32 MISING RECEPTACLE COVER
K08-E-506 SCALE: N.T.S.

CORRECTIVE ACTION NUMBER
123

33 PAINTED FLOOR ARROW DETAILS
K08-E-504 SCALE: N.T.S.

CORRECTIVE ACTION NUMBER
104

34 NON-FUNCTIONING EXIT FIXTURE
K08-E-501 K08-E-504 SCALE: N.T.S.

CORRECTIVE ACTION NUMBER
120

35 CORRODED CONDUIT
K08-E-501 SCALE: N.T.S.

GFP A Gannett Fleming/Parsons JOINT VENTURE

COMMONWEALTH OF VIRGINIA
MONTE A. RICHARDS
Lic. No. 0402035948
01/25/2018
PROFESSIONAL ENGINEER

DESIGNED	M. RICHARDS	01/2018 DATE
DRAWN	R. PINNICK	01/2018 DATE
CHECKED	M. RICHARDS	01/2018 DATE

REFERENCE DRAWINGS

NUMBER	TITLE

REVISIONS

DATE	NUM	DESCRIPTION
01/25/2018	0	FINAL SUBMITTAL

WASHINGTON METROPOLITAN AREA TRANSIT AUTHORITY
OFFICE OF DESIGN AND CONSTRUCTION
IRPG - FIXED FACILITIES

APPROVED 01/25/2018 DATE
JOHN PURDY
ENGINEERING MANAGER

APPROVED 01/25/2018 DATE
MONTE A. RICHARDS, P.E.
ENGINEER OF RECORD

REHABILITATION OF WMATA PARKING FACILITIES
K08 - VIENNA NORTH PARKING GARAGE
ELECTRICAL
DEFICIENCY PHOTOGRAPHS □ CORRECTIVE ACTIONS REQUIRED

M NO.	CONTRACT NO.	SCALE	DRAWING NO.	SHEET NO.
M1301	FQ18064	N.T.S.	K08-E-513	480 of 503

CORRECTIVE ACTION NUMBER
117

36 K08-E-501 MISSING WALL HEATER COVER
SCALE: N.T.S.

CORRECTIVE ACTION NUMBER
120

37 K08-E-501 CORRODED CONDUIT
SCALE: N.T.S.

CORRECTIVE ACTION NUMBER
117

38 K08-E-501 MISSING WALL HEATER COVER
SCALE: N.T.S.

CORRECTIVE ACTION NUMBER
123

39 K08-E-501 CORRODED WIRE TROUGH
SCALE: N.T.S.

CORRECTIVE ACTION NUMBER
123

40 K08-E-501 CORRODED CONDUIT SUPPORT
SCALE: N.T.S.

CORRECTIVE ACTION NUMBER
103

41 K08-E-507 MISSING LIGHT FIXTURE
SCALE: N.T.S.

CORRECTIVE ACTION NUMBER
120, 123

42 K08-E-502 CORRODED CONDUIT / CORRODED CONDUIT SUPPORT
SCALE: N.T.S.

CORRECTIVE ACTION NUMBER
120, 123

43 K08-E-504 CORRODED CONDUIT / CORRODED J-BOX
SCALE: N.T.S.

GFP A Gannett Fleming/Parsons JOINT VENTURE

COMMONWEALTH OF VIRGINIA
MONTE A. RICHARDS
Lic. No. 0402035948
01/25/2018
PROFESSIONAL ENGINEER

DESIGNED	M. RICHARDS	01/2018 DATE
DRAWN	R. PINNICK	01/2018 DATE
CHECKED	M. RICHARDS	01/2018 DATE

REFERENCE DRAWINGS

NUMBER	TITLE

REVISIONS

DATE	NUM	DESCRIPTION
01/25/2018	0	FINAL SUBMITTAL

metro WASHINGTON METROPOLITAN AREA TRANSIT AUTHORITY

OFFICE OF DESIGN AND CONSTRUCTION
IRPG - FIXED FACILITIES

APPROVED 01/25/2018
JOHN PURDY DATE
ENGINEERING MANAGER

APPROVED 01/25/2018
MONTE A. RICHARDS, P.E. DATE
ENGINEER OF RECORD

REHABILITATION OF WMATA PARKING FACILITIES
K08 - VIENNA NORTH PARKING GARAGE
ELECTRICAL
DEFICIENCY PHOTOGRAPHS □ CORRECTIVE ACTIONS REQUIRED

M NO.	CONTRACT NO.	SCALE	DRAWING NO.	SHEET NO.
M1301	FQ18064	N.T.S	K08-E-514	481 of 503

CORRECTIVE ACTION NUMBER
123

44 CORRODED CONDUIT SUPPORT
K08-E-504 SCALE: N.T.S.

CORRECTIVE ACTION NUMBER
123

45 CORRODED CONDUIT SUPPORT AND J-BOX
K08-E-504 SCALE: N.T.S.

A Gannett Fleming/Parsons JOINT VENTURE

COMMONWEALTH OF VIRGINIA
MONTE A. RICHARDS
Lic. No. 040203594 8
01/25/2018
PROFESSIONAL ENGINEER

DESIGNED	M. RICHARDS	01/2018 DATE
DRAWN	R. PINNICK	01/2018 DATE
CHECKED	M. RICHARDS	01/2018 DATE

REFERENCE DRAWINGS

NUMBER	TITLE

REVISIONS

DATE	NUM	DESCRIPTION
01/25/2018	0	FINAL SUBMITTAL

WASHINGTON METROPOLITAN AREA TRANSIT AUTHORITY

OFFICE OF DESIGN AND CONSTRUCTION
IRPG - FIXED FACILITIES

APPROVED 01/25/2018 DATE
JOHN PURDY
ENGINEERING MANAGER

APPROVED 01/25/2018 DATE
MONTE A. RICHARDS, P.E.
ENGINEER OF RECORD

REHABILITATION OF WMATA PARKING FACILITIES
K08 - VIENNA NORTH PARKING GARAGE
ELECTRICAL
DEFICIENCY PHOTOGRAPHS CORRECTIVE ACTIONS REQUIRED

M NO.	CONTRACT NO.	SCALE	DRAWING NO.	SHEET NO.
M1301	FQ18064	N.T.S.	K08-E-515	482 of 503

INDEX OF DRAWINGS

DRAWING NO.	SHEET NO.	TITLE
G-002	483 OF 503	DRAWING INDEX
S-501	484 OF 503	TYPICAL REPAIR DETAILS 1 OF 19
S-502	485 OF 503	TYPICAL REPAIR DETAILS 2 OF 19
S-503	486 OF 503	TYPICAL REPAIR DETAILS 3 OF 19
S-504	487 OF 503	TYPICAL REPAIR DETAILS 4 OF 19
S-505	488 OF 503	TYPICAL REPAIR DETAILS 5 OF 19
S-506	489 OF 503	TYPICAL REPAIR DETAILS 6 OF 19
S-507	490 OF 503	TYPICAL REPAIR DETAILS 7 OF 19
S-508	491 OF 503	TYPICAL REPAIR DETAILS 8 OF 19
S-509	492 OF 503	TYPICAL REPAIR DETAILS 9 OF 19
S-510	493 OF 503	TYPICAL REPAIR DETAILS 10 OF 19
S-511	494 OF 503	TYPICAL REPAIR DETAILS 11 OF 19
S-512	495 OF 503	TYPICAL REPAIR DETAILS 12 OF 19
S-513	496 OF 503	TYPICAL REPAIR DETAILS 13 OF 19
S-514	497 OF 503	TYPICAL REPAIR DETAILS 14 OF 19
S-515	498 OF 503	TYPICAL REPAIR DETAILS 15 OF 19
S-516	499 OF 503	TYPICAL REPAIR DETAILS 16 OF 19
S-517	500 OF 503	TYPICAL REPAIR DETAILS 17 OF 19
S-518	501 OF 503	TYPICAL REPAIR DETAILS 18 OF 19
S-519	502 OF 503	TYPICAL REPAIR DETAILS 19 OF 19
P-500	503 OF 503	TYPICAL PLUMBING REPAIR DETAILS

A Gannett Fleming/Parsons JOINT VENTURE

COMMONWEALTH OF VIRGINIA
IFTEKHAR AHMAD
Lic. No. 0402050670
01/25/2018
PROFESSIONAL ENGINEER

STATE OF MARYLAND
IFTEKHAR AHMAD
No. 42582
PROFESSIONAL ENGINEER

"PROFESSIONAL CERTIFICATION: I HEREBY CERTIFY THAT THESE DOCUMENTS WERE PREPARED OR APPROVED BY ME, AND THAT I AM A DULY LICENSED PROFESSIONAL ENGINEER UNDER THE LAWS OF THE STATE OF MARYLAND."

LICENSE No. 42582

EXPIRATION DATE: 08/13/2018

- COMAR 09.23.03.10

DESIGNED	M. PARK	01/2018 DATE
DRAWN	L. NGUYEN	01/2018 DATE
CHECKED	I. AHMAD	01/2018 DATE

REFERENCE DRAWINGS

NUMBER	TITLE

REVISIONS

DATE	NUM	DESCRIPTION
01/25/2018	0	FINAL SUBMITTAL

WASHINGTON METROPOLITAN AREA TRANSIT AUTHORITY

OFFICE OF DESIGN AND CONSTRUCTION
IRPG - FIXED FACILITIES

APPROVED 01/25/2018 DATE
JOHN PURDY
ENGINEERING MANAGER

APPROVED 01/25/2018 DATE
IFTEKHAR AHMAD
ENGINEER OF RECORD

REHABILITATION OF PARKING GARAGES

INDEX OF DRAWINGS

M NO.	CONTRACT NO.	SCALE	DRAWING NO.	SHEET NO.
M1301	FQ18064	NONE	G-002	483 of 503

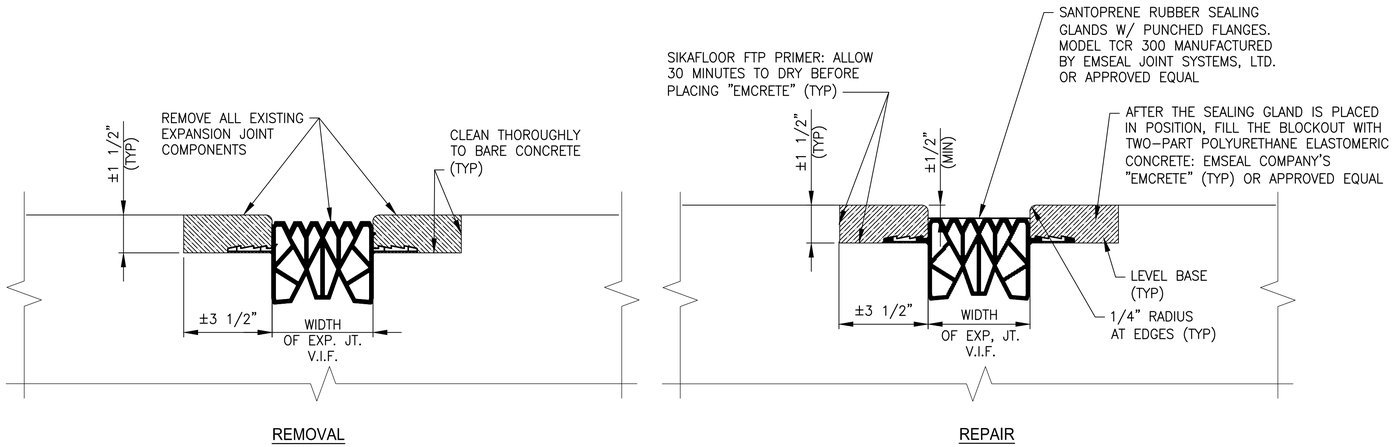

1 / S-501 TYPICAL EXPANSION JOINT REPAIR DETAIL

NOT TO SCALE

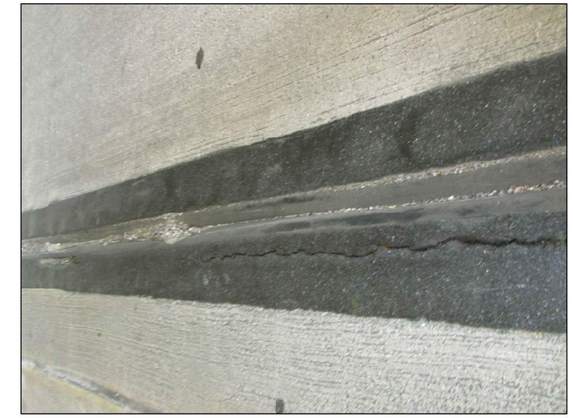

DETERIORATED EXPANSION JOINT

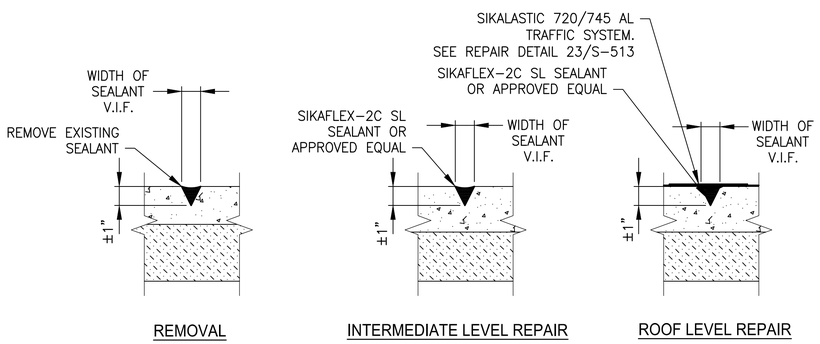

2 / S-501 TYPICAL SEALANT REPAIR DETAIL AT TOOLED JOINT

NOT TO SCALE

DETERIORATED SEALANT AT TOOLED JOINT

"PROFESSIONAL CERTIFICATION: I HEREBY CERTIFY THAT THESE DOCUMENTS WERE PREPARED OR APPROVED BY ME, AND THAT I AM A DULY LICENSED PROFESSIONAL ENGINEER UNDER THE LAWS OF THE STATE OF MARYLAND."

LICENSE No. 34339

EXPIRATION DATE: 06/17/2019

COMMONWEALTH OF VIRGINIA — DIPANKAR SENGUPTA — Lic. No. 0402043677 — 01-25-2018 — PROFESSIONAL ENGINEER

STATE OF MARYLAND — DIPANKAR SENGUPTA — 34339 — PROFESSIONAL ENGINEER

COMMONWEALTH OF VIRGINIA — IFTEKHAR AHMAD — Lic. No. 0402050570 — 01/25/2018 — PROFESSIONAL ENGINEER

GFP A Gannett Fleming/Parsons JOINT VENTURE

STATE OF MARYLAND — IFTEKHAR AHMAD — No. 42582 — PROFESSIONAL ENGINEER

"PROFESSIONAL CERTIFICATION: I HEREBY CERTIFY THAT THESE DOCUMENTS WERE PREPARED OR APPROVED BY ME, AND THAT I AM A DULY LICENSED PROFESSIONAL ENGINEER UNDER THE LAWS OF THE STATE OF MARYLAND."

LICENSE No. 42582

EXPIRATION DATE: 08/13/2018

- COMAR 09.23.0310

DESIGNED	M. PARK	01/2018 DATE
DRAWN	L. NGUYEN	01/2018 DATE
CHECKED	L. KATSMAN	01/2018 DATE

REFERENCE DRAWINGS

NUMBER	TITLE

REVISIONS

DATE	NUM	DESCRIPTION
01/25/2018	0	FINAL SUBMITTAL

WASHINGTON METROPOLITAN AREA TRANSIT AUTHORITY

OFFICE OF THE CHIEF OPERATING OFFICER
IRPG - FIXED FACILITIES

APPROVED 01/25/2018 DATE
JOHN PURDY
ENGINEERING MANAGER

APPROVED 01/25/2018 DATE
IFTEKHAR AHMAD / DIPANKAR SENGUPTA
ENGINEER OF RECORD

REHABILITATION OF PARKING GARAGES
STANDARD STRUCTURAL REPAIR DETAILS

TYPICAL REPAIR DETAILS 1 OF 19

M NO.	CONTRACT NO.	SCALE	DRAWING NO.	SHEET NO.
M1301	FQ18064	AS NOTED	S-501	484 of 504

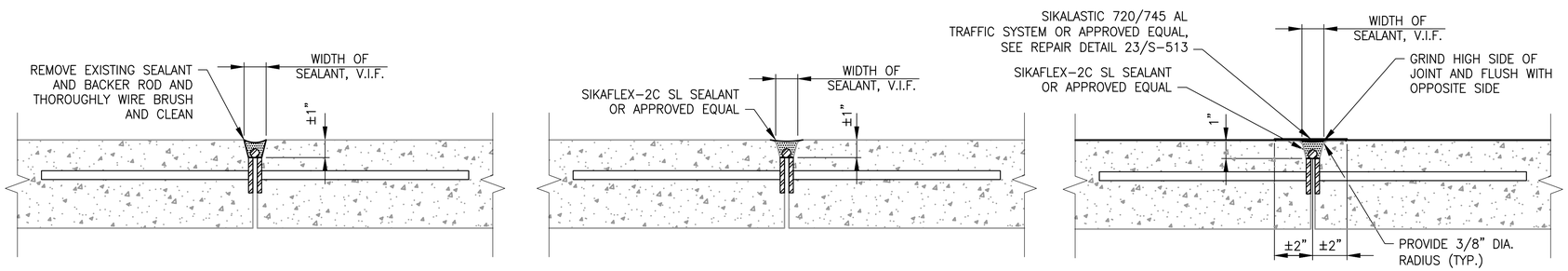

3 S-502 TYPICAL SEALANT REPAIR DETAIL AT DOUBLE TEE BEAM JOINT

NOT TO SCALE

DETERIORATED SEALANT AT DOUBLE TEE BEAM JOINT

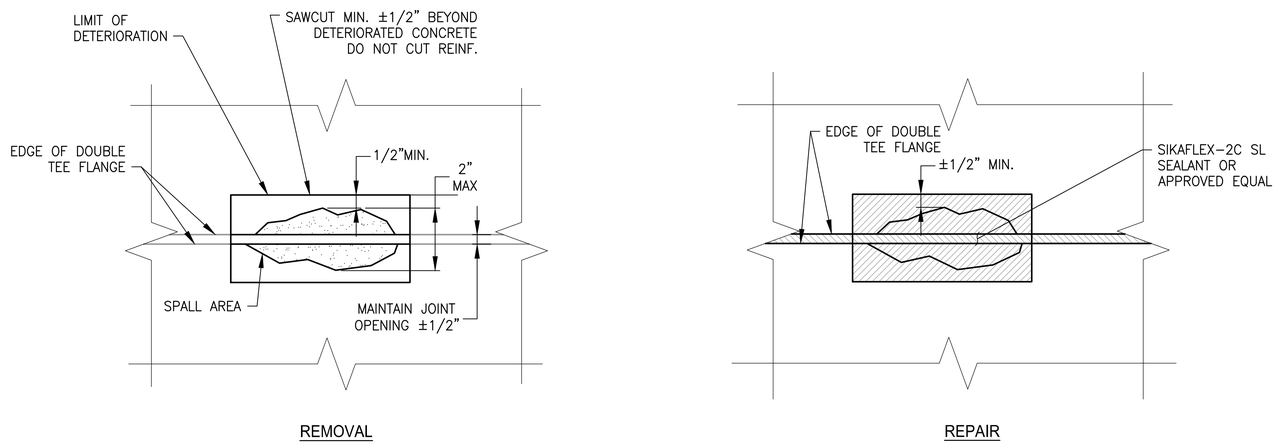

4 S-502 TYPICAL DOUBLE TEE BEAM FLANGE SPALL WITH SEALANT DETAIL (SPALL WIDTH <2")

NOT TO SCALE

DOUELE TEE BEAM FLANGE SPALL WITH SEALANT

"PROFESSIONAL CERTIFICATION: I HEREBY CERTIFY THAT THESE DOCUMENTS WERE PREPARED OR APPROVED BY ME, AND THAT I AM A DULY LICENSED PROFESSIONAL ENGINEER UNDER THE LAWS OF THE STATE OF MARYLAND."

LICENSE No. 34339

EXPIRATION DATE: 06/17/2019

COMMONWEALTH OF VIRGINIA — DIPANKAR SENGUPTA Lic. No. 0402043677 — 01-25-2018 — PROFESSIONAL ENGINEER

STATE OF MARYLAND — DIPANKAR SENGUPTA — PROFESSIONAL ENGINEER

COMMONWEALTH OF VIRGINIA — IFTEKHAR AHMAD Lic. No. 0402050570 — 01/25/2018 — PROFESSIONAL ENGINEER

GFP A Gannett Fleming/Parsons JOINT VENTURE

STATE OF MARYLAND — IFTEKHAR AHMAD — No. 42582 — PROFESSIONAL ENGINEER

"PROFESSIONAL CERTIFICATON: I HEREBY CERTIFY THAT THESE DOCUMENTS WERE PREPARED OR APPROVED BY ME, AND THAT I AM A DULY LICENSED PROFESSIONAL ENGINEER UNDER THE LAWS OF THE STATE OF MARYLAND."

LICENSE No. 42582

EXPIRATIONDATE: 08/13/2018

- COMAR 09.23.0310

DESIGNED	M. PARK	01/2018 DATE
DRAWN	L. NGUYEN	01/2018 DATE
CHECKED	L. KATSMAN	01/2018 DATE

REFERENCE DRAWINGS

NUMBER	TITLE

REVISIONS

DATE	NUM	DESCRIPTION
01/25/2018	0	FINAL SUBMITTAL

WASHINGTON METROPOLITAN AREA TRANSIT AUTHORITY

OFFICE OF THE CHIEF OPERATING OFFICER
IRPG - FIXED FACILITIES

APPROVED 01/25/2018 DATE
JOHN PURDY
ENGINEERING MANAGER

APPROVED 01/25/2018 DATE
IFTEKHAR AHMAD / DIPANKAR SENGUPTA
ENGINEER OF RECORD

REHABILITATION OF PARKING GARAGES
STANDARD STRUCTURAL REPAIR DETAILS

TYPICAL REPAIR DETAILS 2 OF 19

M NO.	CONTRACT NO.	SCALE	DRAWING NO.	SHEET NO.
M1301	FQ18064	AS NOTED	S-502	485 of 504

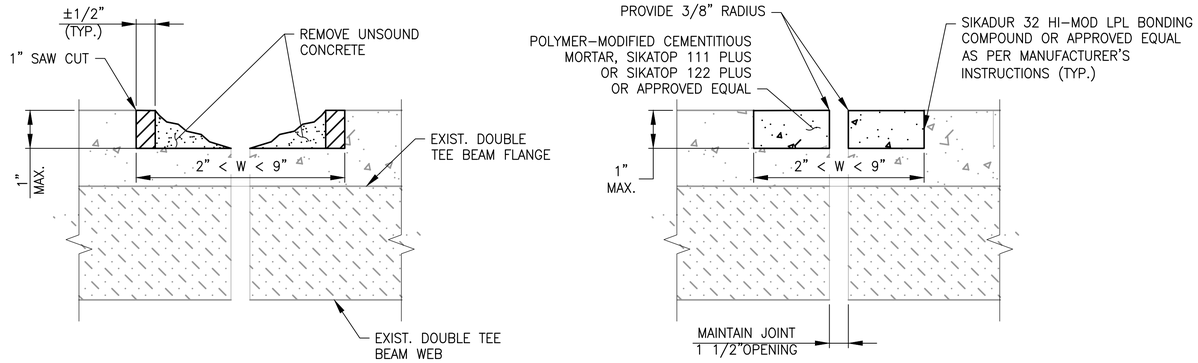

REMOVAL

REPAIR

5 / S-503 TYPICAL DOUBLE TEE BEAM FLANGE SPALL REPAIR DETAIL (2" < SPALL WIDTH < 9")

NOT TO SCALE

DETERIORATED SEALANT AND SPALL AT DOUBLE TEE BEAM JOINT

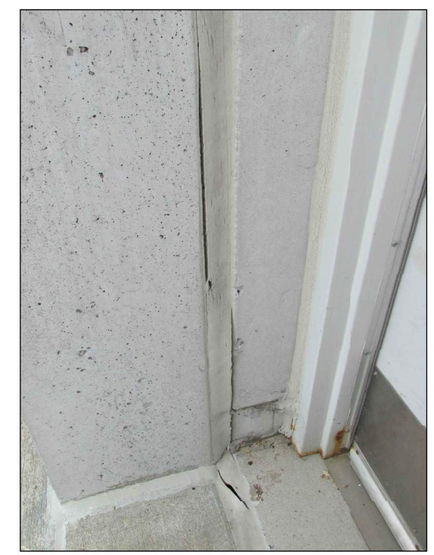

DETERIORATED VERTICAL JOINT SEALANT

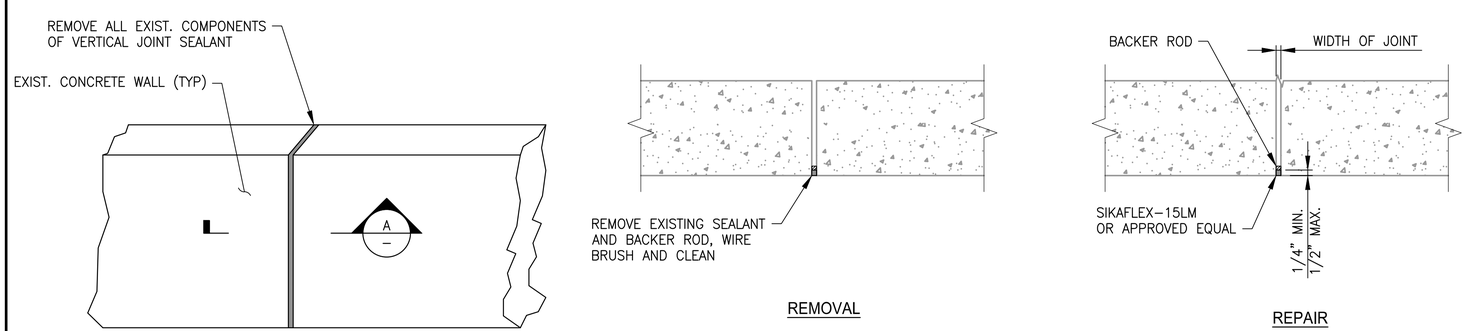

REMOVAL

REMOVAL

REPAIR

A / – SECTION

NOT TO SCALE

6 / S-503 TYPICAL VERTICAL JOINT SEALANT REPAIR DETAIL

NOT TO SCALE

"PROFESSIONAL CERTIFICATION: I HEREBY CERTIFY THAT THESE DOCUMENTS WERE PREPARED OR APPROVED BY ME, AND THAT I AM A DULY LICENSED PROFESSIONAL ENGINEER UNDER THE LAWS OF THE STATE OF MARYLAND."

LICENSE No. 34339

EXPIRATION DATE: 06/17/2019

COMMONWEALTH OF VIRGINIA — DIPANKAR SENGUPTA Lic. No. 0402043677 — 01-25-2018 — PROFESSIONAL ENGINEER

STATE OF MARYLAND — DIPANKAR SENGUPTA — 34339 — PROFESSIONAL ENGINEER

COMMONWEALTH OF VIRGINIA — IFTEKHAR AHMAD Lic. No. 0402050570 — 01/25/2018 — PROFESSIONAL ENGINEER

GFP A Gannett Fleming/Parsons JOINT VENTURE

STATE OF MARYLAND — IFTEKHAR AHMAD — No. 42582 — 01/25/18 — PROFESSIONAL ENGINEER

"PROFESSIONAL CERTIFICATION: I HEREBY CERTIFY THAT THESE DOCUMENTS WERE PREPARED OR APPROVED BY ME, AND THAT I AM A DULY LICENSED PROFESSIONAL ENGINEER UNDER THE LAWS OF THE STATE OF MARYLAND."

LICENSE No. 42582

EXPIRATION DATE: 08/13/2018

- COMAR 09.23.0310

DESIGNED	M. PARK	01/2018 DATE
DRAWN	L. NGUYEN	01/2018 DATE
CHECKED	L. KATSMAN	01/2018 DATE

REFERENCE DRAWINGS

NUMBER	TITLE

REVISIONS

DATE	NUM	DESCRIPTION
01/25/2018	0	FINAL SUBMITTAL

WASHINGTON METROPOLITAN AREA TRANSIT AUTHORITY

OFFICE OF THE CHIEF OPERATING OFFICER
IRPG - FIXED FACILITIES

APPROVED 01/25/2018 DATE
JOHN PURDY
ENGINEERING MANAGER

APPROVED 01/25/2018 DATE
IFTEKHAR AHMAD / DIPANKAR SENGUPTA
ENGINEER OF RECORD

REHABILITATION OF PARKING GARAGES
STANDARD STRUCTURAL REPAIR DETAILS

TYPICAL REPAIR DETAILS 3 OF 19

M NO.	CONTRACT NO.	SCALE	DRAWING NO.	SHEET NO.
M1301	FQ18064	AS NOTED	S-503	486 of 504

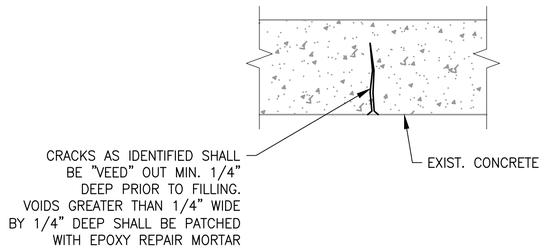

STEP 1

CLEAN OUT CRACK WITH HAND TOOLS, HIGH PRESSURE AIR BLAST AND VACUUM CLEAN SURFACE

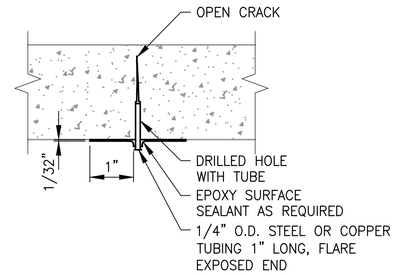

STEP 2

DRILL HOLES FOR PORTS TO A WIDTH AND DEPTH SUFFICIENT TO ASSURE A SNUG FIT OF THE PORT. CLEAN OUT DEBRIS WITH HIGH PRESSURE AIR BLASTING. INSERT PORTS AND SEAL SURFACE OF CRACK WITH EPOXY SURFACE SEALANT. SEAL SHALL EXTEND ABOVE CONCRETE SURFACE A MINIMUM OF 1/16" AND EXTEND A MINIMUM OF 1" EITHER SIDE OF CRACK. ALLOW A MINIMUM OF 8 HOURS CURING TIME BEFORE INITIATING INJECTION PROCESS.

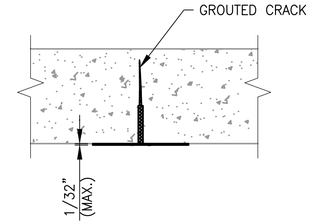

STEP 3

INJECT SIKADUR INJECTION JEL EPOXY PASTE. ALLOW MINIMUM OF 8 HOURS CURING TIME. REMOVE A MINIMUM AMOUNT OF EPOXY SURFACE SEALANT AND SEALER TO THE SATISFACTION OF THE AUTHORITY REPRESENTATIVE (AR).

- CUT OFF GROUT TUBE FLUSH WITH CONCRETE FACE.
- PATCH OVER GROUT TUBE.
- GRIND EPOXY SURFACE SEALANT SMOOTH TO ABOUT 1/32" OVER CRACK (UNIFORM THICKNESS) AND FEATHER EDGES INTO CONCRETE FACE.

* NOTE: FOR LONGITUDINAL CRACKS IN DOUBLE TEE FLANGE, REPAIR DETAIL 36/S-517 SHALL BE PROVIDED.

TYPICAL UNDERSIDE CRACK

7 / S-504 TYPICAL UNDERSIDE CRACK REPAIR DETAIL

NOT TO SCALE

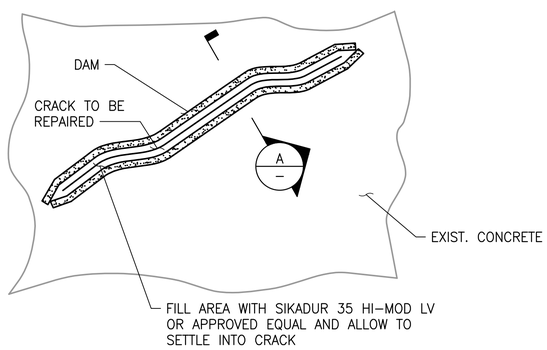

PLAN

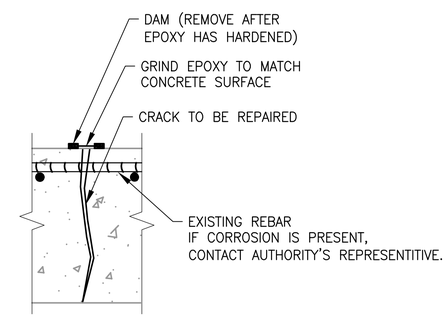

A / – SECTION

NOT TO SCALE

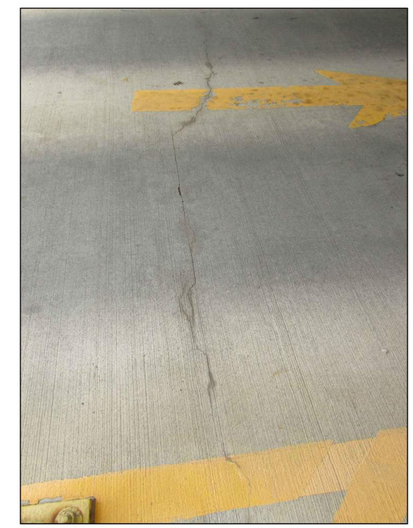

TYFICAL TOP SIDE CRACK

CONCRETE CRACK REPAIR NOTES:

1. CRACKS LESS THAN 1/16" WIDE DO NOT REQUIRE REPAIR.
2. CLEAN CRACKS WIDER THAN 1/16" USING OIL-FREE COMPRESSED AIR OR WATER UNDER PRESSURE TO REMOVE ALL DIRT AND LOOSE MATERIAL WITHIN THE CRACKS.
3. CRACKS SHOWN ARE SCHEMATIC, THE ACTUAL LOCATIONS AND LIMITS OF DETERIORATION SHALL BE VERIFIED AND APPROVED BY THE ENGINEER.
4. CRACKS WHICH ARE ASSOCIATED WITH DELAMINATIONS SHALL BE REMOVED WITH THE DELAMINATED CONCRETE.

8 / S-504 TYPICAL TOP SIDE CRACK REPAIR DETAIL

NOT TO SCALE

"PROFESSIONAL CERTIFICATION: I HEREBY CERTIFY THAT THESE DOCUMENTS WERE PREPARED OR APPROVED BY ME, AND THAT I AM A DULY LICENSED PROFESSIONAL ENGINEER UNDER THE LAWS OF THE STATE OF MARYLAND."

LICENSE No. 34339

EXPIRATION DATE: 06/17/2019

COMMONWEALTH OF VIRGINIA — DIPANKAR SENGUPTA — Lic. No. 0402043677 — 01-25-2018 — PROFESSIONAL ENGINEER

STATE OF MARYLAND — DIPANKAR SENGUPTA — 34339 — PROFESSIONAL ENGINEER

COMMONWEALTH OF VIRGINIA — IFTEKHAR AHMAD — Lic. No. 0402050670 — 01/25/2018 — PROFESSIONAL ENGINEER

GFP — A Gannett Fleming/Parsons JOINT VENTURE

STATE OF MARYLAND — IFTEKHAR AHMAD — No. 42582 — PROFESSIONAL ENGINEER

"PROFESSIONAL CERTIFICATON: I HEREBY CERTIFY THAT THESE DOCUMENTS WERE PREPARED OR APPROVED BY ME, AND THAT I AM A DULY LICENSED PROFESSIONAL ENGINEER UNDER THE LAWS OF THE STATE OF MARYLAND."

LICENSE No. 42582

EXPIRATIONDATE: 08/13/2018

- COMAR 09.23.0310

DESIGNED	M. PARK	01/2018 DATE
DRAWN	L. NGUYEN	01/2018 DATE
CHECKED	L. KATSMAN	01/2018 DATE

REFERENCE DRAWINGS

NUMBER	TITLE

REVISIONS

DATE	NUM	DESCRIPTION
01/25/2018	0	FINAL SUBMITTAL

WASHINGTON METROPOLITAN AREA TRANSIT AUTHORITY

OFFICE OF THE CHIEF OPERATING OFFICER

IRPG - FIXED FACILITIES

APPROVED 01/25/2018 DATE — JOHN PURDY, ENGINEERING MANAGER

APPROVED 01/25/2018 DATE — IFTEKHAR AHMAD / DIPANKAR SENGUPTA, ENGINEER OF RECORD

REHABILITATION OF PARKING GARAGES

STANDARD STRUCTURAL REPAIR DETAILS

TYPICAL REPAIR DETAILS 4 OF 19

M NO.	CONTRACT NO.	SCALE	DRAWING NO.	SHEET NO.
M1301	FQ18064	AS NOTED	S-504	487 of 504

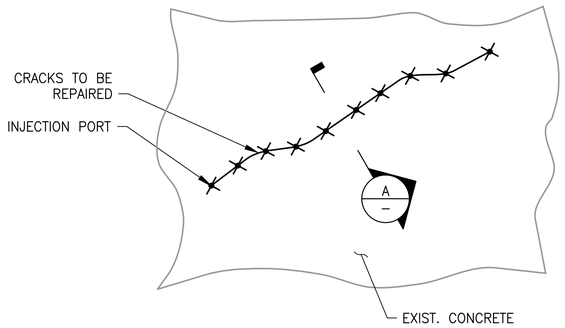

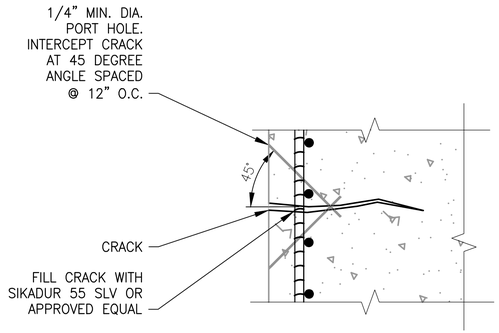

A – SECTION
NOT TO SCALE

NOTE: SEE 7/S-504 FOR REPAIR PROCEDURE.

9 / S-505 TYPICAL VERTICAL CRACK REPAIR DETAIL

NOT TO SCALE

TYPICAL VERTICAL CRACK

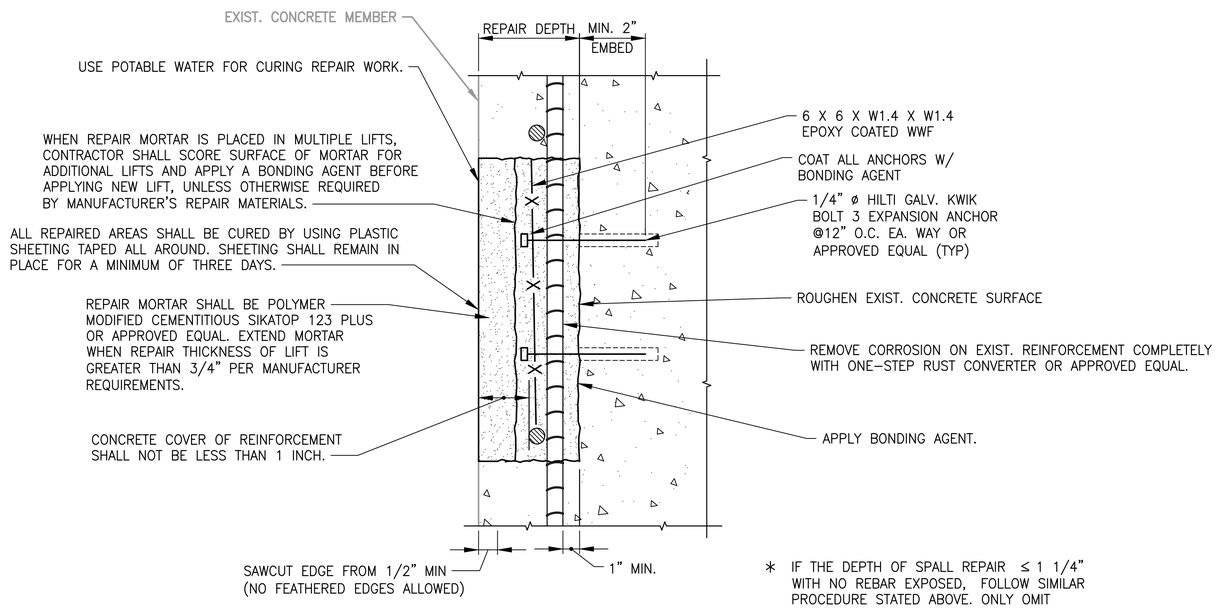

* IF THE DEPTH OF SPALL REPAIR ≤ 1 1/4" WITH NO REBAR EXPOSED, FOLLOW SIMILAR PROCEDURE STATED ABOVE. ONLY OMIT STEP TO REMOVE CORROSSION.

10 / S-505 TYPICAL VERTICAL SPALL REPAIR DETAIL

NOT TO SCALE

TYPICAL VERTICAL SPALL

"PROFESSIONAL CERTIFICATION: I HEREBY CERTIFY THAT THESE DOCUMENTS WERE PREPARED OR APPROVED BY ME, AND THAT I AM A DULY LICENSED PROFESSIONAL ENGINEER UNDER THE LAWS OF THE STATE OF MARYLAND."

LICENSE No. 34339

EXPIRATION DATE: 06/17/2019

COMMONWEALTH OF VIRGINIA — DIPANKAR SENGUPTA Lic. No. 0402043677 — 01-25-2018 — PROFESSIONAL ENGINEER

STATE OF MARYLAND — DIPANKAR SENGUPTA — 34339 — PROFESSIONAL ENGINEER

COMMONWEALTH OF VIRGINIA — IFTEKHAR AHMAD Lic. No. 0402050670 — 01/25/2018 — PROFESSIONAL ENGINEER

GFP A Gannett Fleming/Parsons JOINT VENTURE

STATE OF MARYLAND — IFTEKHAR AHMAD — No. 42582 — PROFESSIONAL ENGINEER

"PROFESSIONAL CERTIFICATON: I HEREBY CERTIFY THAT THESE DOCUMENTS WERE PREPARED OR APPROVED BY ME, AND THAT I AM A DULY LICENSED PROFESSIONAL ENGINEER UNDER THE LAWS OF THE STATE OF MARYLAND."

LICENSE No. 42582

EXPIRATIONDATE: 08/13/2018

- COMAR 09.23.0310

DESIGNED	M. PARK	01/2018 DATE
DRAWN	L. NGUYEN	01/2018 DATE
CHECKED	L. KATSMAN	01/2018 DATE

REFERENCE DRAWINGS

NUMBER	TITLE

REVISIONS

DATE	NUM	DESCRIPTION
01/25/2018	0	FINAL SUBMITTAL

WASHINGTON METROPOLITAN AREA TRANSIT AUTHORITY

OFFICE OF THE CHIEF OPERATING OFFICER
IRPG - FIXED FACILITIES

APPROVED 01/25/2018 DATE
JOHN PURDY
ENGINEERING MANAGER

APPROVED 01/25/2018 DATE
IFTEKHAR AHMAD / DIPANKAR SENGUPTA
ENGINEER OF RECORD

REHABILITATION OF PARKING GARAGES
STANDARD STRUCTURAL REPAIR DETAILS

TYPICAL REPAIR DETAILS 5 OF 19

M NO.	CONTRACT NO.	SCALE	DRAWING NO.	SHEET NO.
M1301	FQ18064	AS NOTED	S-505	488 of 504

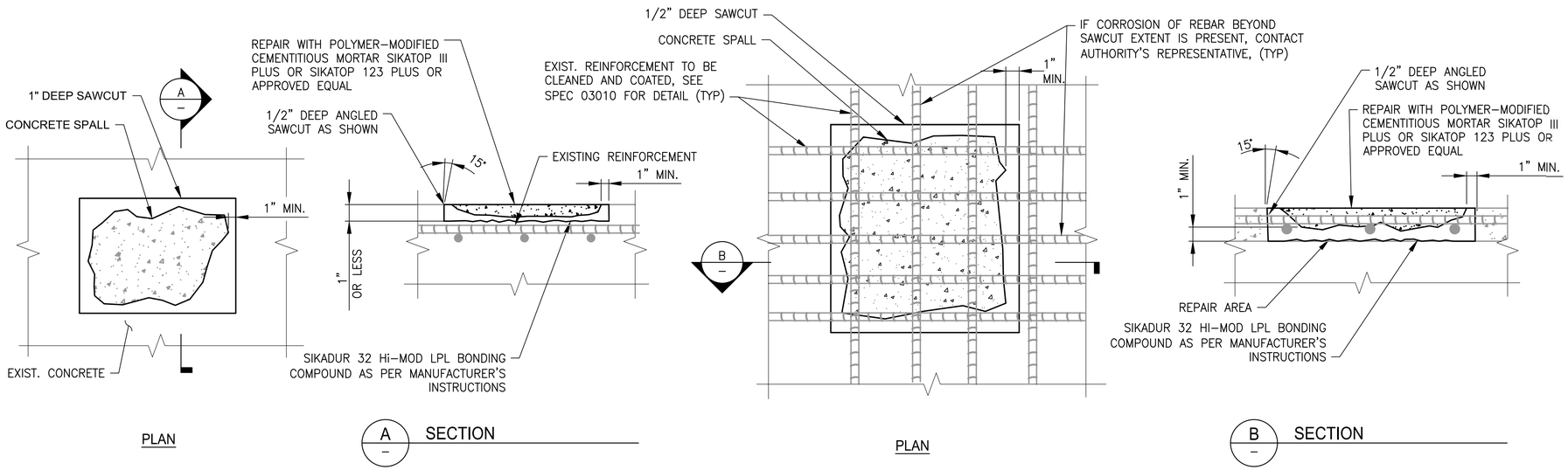

SHALLOW SPALL (SPALL < 1")

DEEP SPALL (SPALL > 1")

11 S-506 TYPICAL CONCRETE TOP SIDE SPALL REPAIR DETAIL

SCALE: NONE

TYPICAL TOP SIDE SPALL

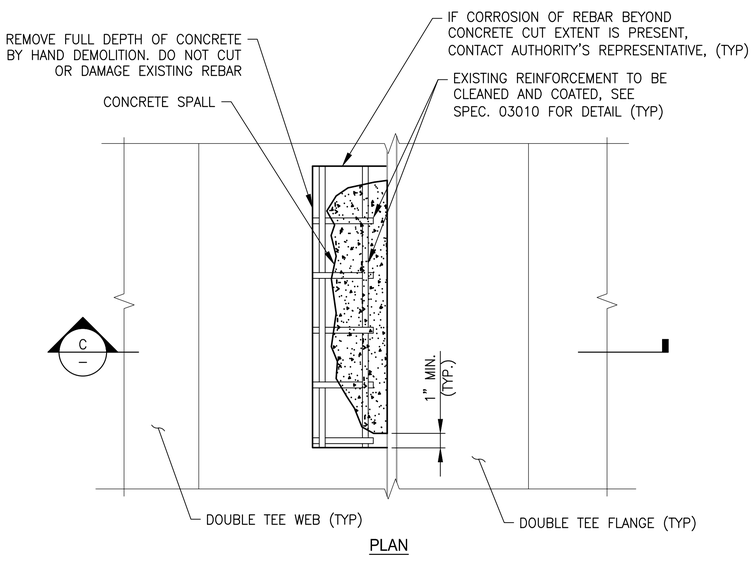

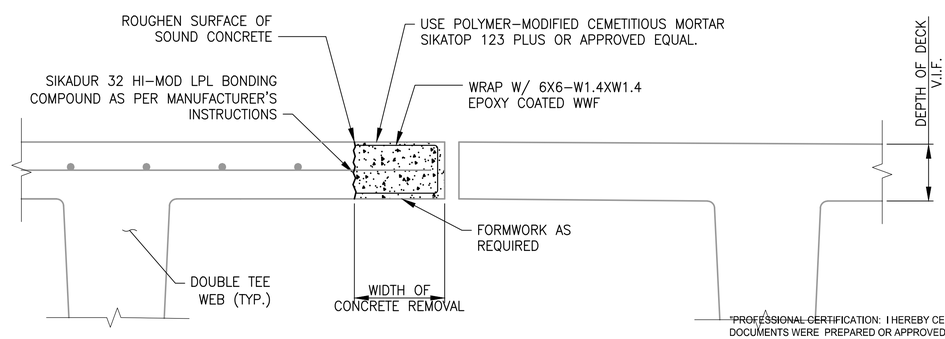

NOT TO SCALE

12 S-506 TYPICAL FULL DEPTH SPALL REPAIR AT UNDERSIDE OF CONCRETE DECK DETAIL

TYPICAL UNDERSIDE DEEP SPALL

"PROFESSIONAL CERTIFICATION: I HEREBY CERTIFY THAT THESE DOCUMENTS WERE PREPARED OR APPROVED BY ME, AND THAT I AM A DULY LICENSED PROFESSIONAL ENGINEER UNDER THE LAWS OF THE STATE OF MARYLAND."

LICENSE No. 34339

EXPIRATION DATE: 06/17/2019

COMMONWEALTH OF VIRGINIA — DIPANKAR SENGUPTA — Lic. No. 0402043677 — 01-25-2018 — PROFESSIONAL ENGINEER

STATE OF MARYLAND — DIPANKAR SENGUPTA — No. 34339 — PROFESSIONAL ENGINEER

NOT TO SCALE

COMMONWEALTH OF VIRGINIA — IFTEKHAR AHMAD — Lic. No. 0402050570 — 01/25/2018 — PROFESSIONAL ENGINEER

GFP A Gannett Fleming/Parsons JOINT VENTURE

STATE OF MARYLAND — IFTEKHAR AHMAD — No. 42582 — PROFESSIONAL ENGINEER

"PROFESSIONAL CERTIFICATON: I HEREBY CERTIFY THAT THESE DOCUMENTS WERE PREPARED OR APPROVED BY ME, AND THAT I AM A DULY LICENSED PROFESSIONAL ENGINEER UNDER THE LAWS OF THE STATE OF MARYLAND."

LICENSE No. 42582

EXPIRATIONDATE: 08/13/2018

- COMAR 09.23.0310

DESIGNED	M. PARK	01/2018 DATE
DRAWN	L. NGUYEN	01/2018 DATE
CHECKED	L. KATSMAN	01/2018 DATE

REFERENCE DRAWINGS

NUMBER	TITLE

REVISIONS

DATE	NUM	DESCRIPTION
01/25/2018	0	FINAL SUBMITTAL

WASHINGTON METROPOLITAN AREA TRANSIT AUTHORITY

OFFICE OF THE CHIEF OPERATING OFFICER

IRPG - FIXED FACILITIES

APPROVED 01/25/2018 DATE — JOHN PURDY, ENGINEERING MANAGER

APPROVED 01/25/2018 DATE — IFTEKHAR AHMAD / DIPANKAR SENGUPTA, ENGINEER OF RECORD

REHABILITATION OF PARKING GARAGES
STANDARD STRUCTURAL REPAIR DETAILS

TYPICAL REPAIR DETAILS 6 OF 19

M NO.	CONTRACT NO.	SCALE	DRAWING NO.	SHEET NO.
M1301	FQ18064	AS NOTED	S-506	489 of 504

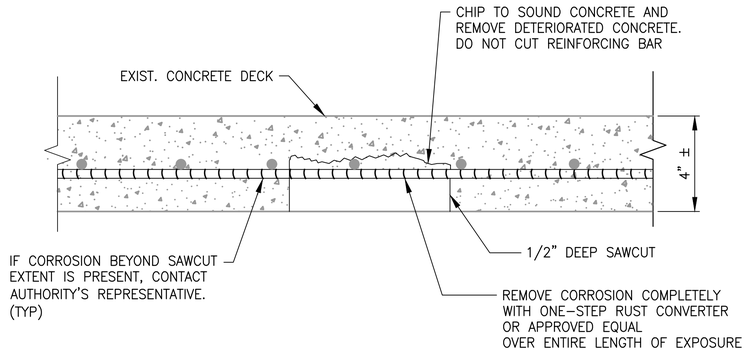

REMOVAL

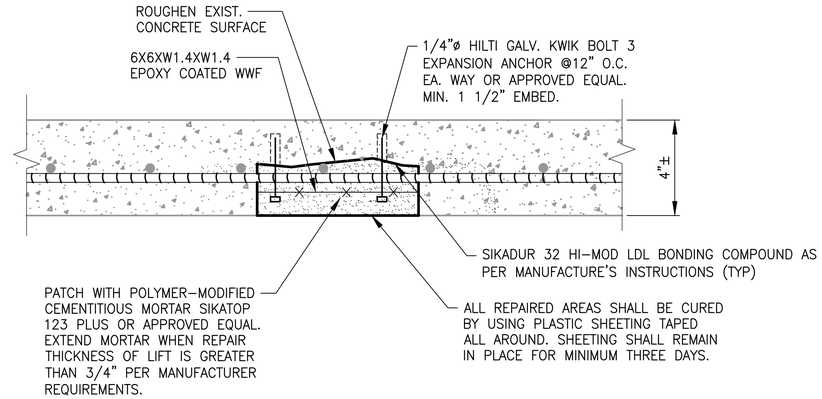

REPAIR

13 / S-507 TYPICAL DEEP SPALL REPAIR AT UNDERSIDE OF CONCRETE DECK DETAIL

NOT TO SCALE

TYPICAL UNDERSIDE SHALLOW SPALL

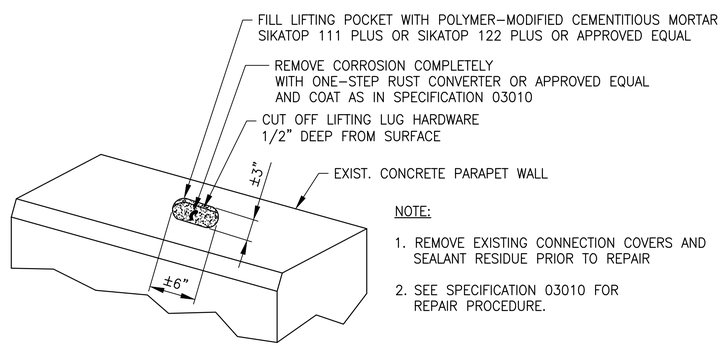

NOTE:

1. REMOVE EXISTING CONNECTION COVERS AND SEALANT RESIDUE PRIOR TO REPAIR
2. SEE SPECIFICATION 03010 FOR REPAIR PROCEDURE.

14 / S-507 TYPICAL REPAIR AT HORIZONTAL LIFTING POINT DETAIL

NOT TO SCALE

CRACK AT HORIZONTAL LIFTING POINT

"PROFESSIONAL CERTIFICATION: I HEREBY CERTIFY THAT THESE DOCUMENTS WERE PREPARED OR APPROVED BY ME, AND THAT I AM A DULY LICENSED PROFESSIONAL ENGINEER UNDER THE LAWS OF THE STATE OF MARYLAND."

LICENSE No. 34339

EXPIRATION DATE: 06/17/2019

COMMONWEALTH OF VIRGINIA — DIPANKAR SENGUPTA Lic. No. 402043677 — 01-25-2018 — PROFESSIONAL ENGINEER

STATE OF MARYLAND — DIPANKAR SENGUPTA — No. 34339 — PROFESSIONAL ENGINEER

COMMONWEALTH OF VIRGINIA — IFTEKHAR AHMAD Lic. No. 0402050670 — 01/25/2018 — PROFESSIONAL ENGINEER

A Gannett Fleming/Parsons JOINT VENTURE

STATE OF MARYLAND — IFTEKHAR AHMAD — No. 42582 — PROFESSIONAL ENGINEER

"PROFESSIONAL CERTIFICATION: I HEREBY CERTIFY THAT THESE DOCUMENTS WERE PREPARED OR APPROVED BY ME, AND THAT I AM A DULY LICENSED PROFESSIONAL ENGINEER UNDER THE LAWS OF THE STATE OF MARYLAND."

LICENSE No. 42582

EXPIRATION DATE: 08/13/2018

- COMAR 09.23.0310

DESIGNED	M. PARK	01/2018 DATE
DRAWN	L. NGUYEN	01/2018 DATE
CHECKED	L. KATSMAN	01/2018 DATE

REFERENCE DRAWINGS

NUMBER	TITLE

REVISIONS

DATE	NUM	DESCRIPTION
01/25/2018	0	FINAL SUBMITTAL

WASHINGTON METROPOLITAN AREA TRANSIT AUTHORITY

OFFICE OF THE CHIEF OPERATING OFFICER

IRPG - FIXED FACILITIES

APPROVED 01/25/2018 DATE — JOHN PURDY, ENGINEERING MANAGER

APPROVED 01/25/2018 DATE — IFTEKHAR AHMAD / DIPANKAR SENGUPTA, ENGINEER OF RECORD

REHABILITATION OF PARKING GARAGES

STANDARD STRUCTURAL REPAIR DETAILS

TYPICAL REPAIR DETAILS 7 OF 19

M NO.	CONTRACT NO.	SCALE	DRAWING NO.	SHEET NO.
M1301	FQ18064	AS NOTED	S-507	490 of 504

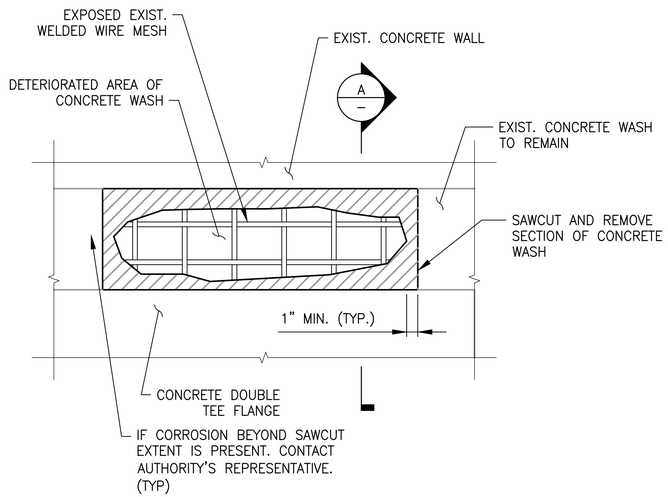

15 S-508 TYPICAL DETERIORATED CONCRETE WASH REPAIR DETAIL

NOT TO SCALE

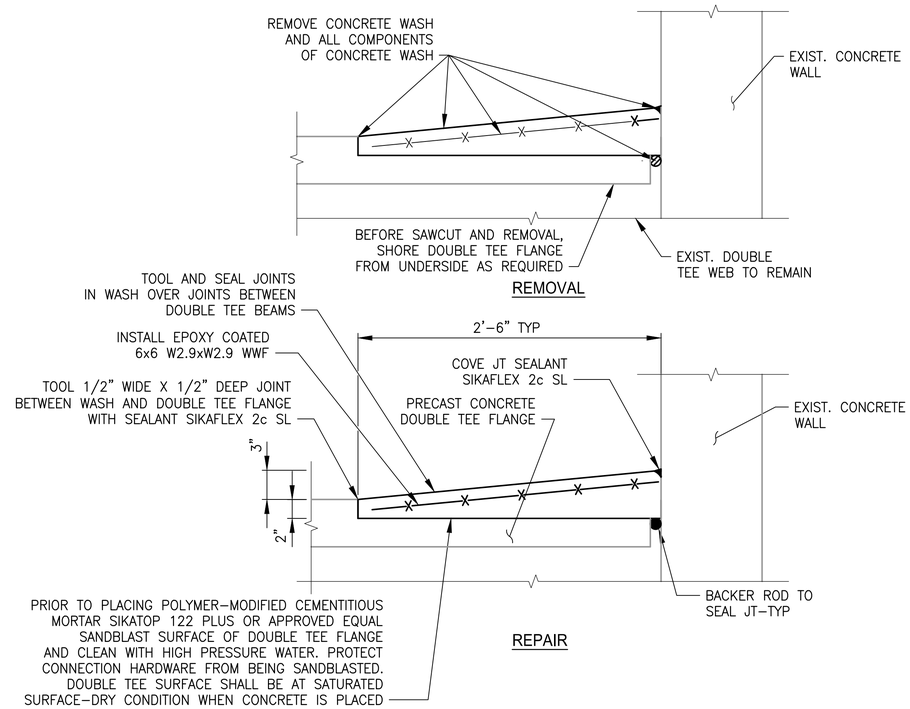

A – SECTION

NOT TO SCALE

TYPICAL DETERIORATED CONCRETE

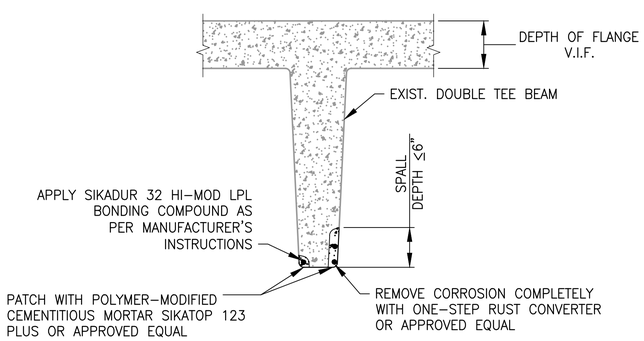

SHALLOW SPALL (SPALL DEPTH < 6")

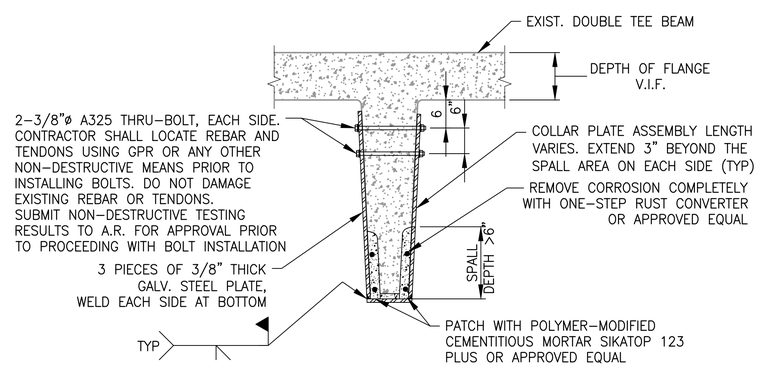

DEEP SPALL (SPALL DEPTH > 6")

TYPICAL DOUBLE TEE WEB SPALL

16 S-508 TYPICAL DOUBLE TEE WEB SPALL REPAIR DETAIL

NOT TO SCALE

"PROFESSIONAL CERTIFICATION: I HEREBY CERTIFY THAT THESE DOCUMENTS WERE PREPARED OR APPROVED BY ME, AND THAT I AM A DULY LICENSED PROFESSIONAL ENGINEER UNDER THE LAWS OF THE STATE OF MARYLAND."

LICENSE No. 34339

EXPIRATION DATE: 06/17/2019

COMMONWEALTH OF VIRGINIA — DIPANKAR SENGUPTA Lic. No. 0402043677 — 31-05-2018 — PROFESSIONAL ENGINEER

STATE OF MARYLAND — DIPANKAR SENGUPTA — 34339 — 06-17-2018 — PROFESSIONAL ENGINEER

COMMONWEALTH OF VIRGINIA — IFTEKHAR AHMAD Lic. No. 0402050670 — 01/25/2018 — PROFESSIONAL ENGINEER

GFP A Gannett Fleming/Parsons JOINT VENTURE

STATE OF MARYLAND — IFTEKHAR AHMAD — No. 42582 — PROFESSIONAL ENGINEER

"PROFESSIONAL CERTIFICATON: I HEREBY CERTIFY THAT THESE DOCUMENTS WERE PREPARED OR APPROVED BY ME, AND THAT I AM A DULY LICENSED PROFESSIONAL ENGINEER UNDER THE LAWS OF THE STATE OF MARYLAND."

LICENSE No. 42582

EXPIRATION DATE: 08/13/2018

- COMAR 09.23.0310

DESIGNED	M. PARK	01/2018 DATE
DRAWN	L. NGUYEN	01/2018 DATE
CHECKED	L. KATSMAN	01/2018 DATE

REFERENCE DRAWINGS

NUMBER	TITLE

REVISIONS

DATE	NUM	DESCRIPTION
01/25/2018	0	FINAL SUBMITTAL

WASHINGTON METROPOLITAN AREA TRANSIT AUTHORITY

OFFICE OF THE CHIEF OPERATING OFFICER

IRPG - FIXED FACILITIES

APPROVED 01/25/2018 DATE — JOHN PURDY, ENGINEERING MANAGER

APPROVED 01/25/2018 DATE — IFTEKHAR AHMAD / DIPANKAR SENGUPTA, ENGINEER OF RECORD

REHABILITATION OF PARKING GARAGES

STANDARD STRUCTURAL REPAIR DETAILS

TYPICAL REPAIR DETAILS 8 OF 19

M NO.	CONTRACT NO.	SCALE	DRAWING NO.	SHEET NO.
M1301	FQ18064	AS NOTED	S-508	491 of 504

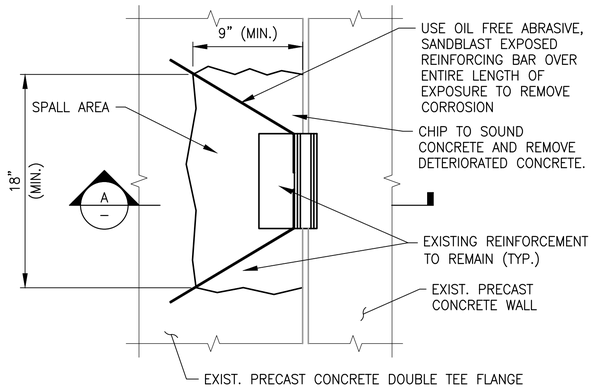

SHEAR WALL TO DOUBLE TEE FLANGE CONNECTION

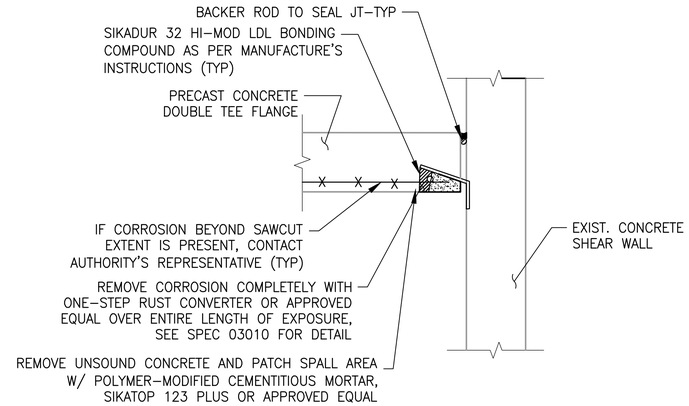

A – SECTION

SCALE: NONE

NOTE: ANY EXPOSED STEEL TO BE CLEANED AND COATED WITH COLD SPRAY GALVANIZING.

TYPICAL DEFECT AT CONNECTION PLATE

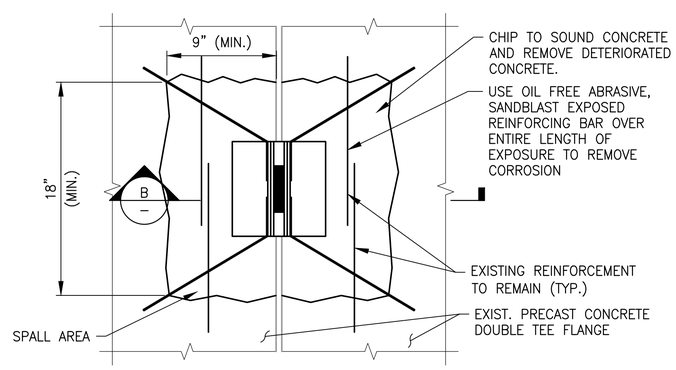

DOUBLE TEE FLANGE TO DOUBLE TEE FLANGE CONNECTION

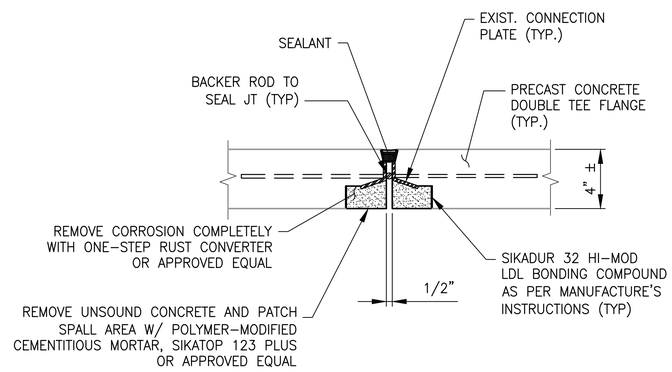

B – SECTION

NOT TO SCALE

NOTE: ANY EXPOSED STEEL TO BE CLEANED AND COATED WITH COLD SPRAY GALVANIZING.

"PROFESSIONAL CERTIFICATION: I HEREBY CERTIFY THAT THESE DOCUMENTS WERE PREPARED OR APPROVED BY ME, AND THAT I AM A DULY LICENSED PROFESSIONAL ENGINEER UNDER THE LAWS OF THE STATE OF MARYLAND."

LICENSE No. 34339

EXPIRATION DATE: 06/17/2019

COMMONWEALTH OF VIRGINIA – DIPANKAR SENGUPTA – Lic. No. 0402043677 – 01-25-2018 – PROFESSIONAL ENGINEER

STATE OF MARYLAND – DIPANKAR SENGUPTA – 34339 – PROFESSIONAL ENGINEER

COMMONWEALTH OF VIRGINIA – IFTEKHAR AHMAD – Lic. No. 0402050570 – 01/25/2018 – PROFESSIONAL ENGINEER

GFP A Gannett Fleming/Parsons JOINT VENTURE

STATE OF MARYLAND – IFTEKHAR AHMAD – No. 42582 – PROFESSIONAL ENGINEER

"PROFESSIONAL CERTIFICATION: I HEREBY CERTIFY THAT THESE DOCUMENTS WERE PREPARED OR APPROVED BY ME, AND THAT I AM A DULY LICENSED PROFESSIONAL ENGINEER UNDER THE LAWS OF THE STATE OF MARYLAND."

LICENSE No. 42582

EXPIRATION DATE: 08/13/2018

- COMAR 09.23.03.10

17 / S–509 TYPICAL CONNECTION PLATE REPAIR DETAIL

NOT TO SCALE

DESIGNED	M. PARK	01/2018 DATE
DRAWN	L. NGUYEN	01/2018 DATE
CHECKED	L. KATSMAN	01/2018 DATE

REFERENCE DRAWINGS

NUMBER	TITLE

REVISIONS

DATE	NUM	DESCRIPTION
01/25/2018	0	FINAL SUBMITTAL

WASHINGTON METROPOLITAN AREA TRANSIT AUTHORITY

OFFICE OF THE CHIEF OPERATING OFFICER
IRPG - FIXED FACILITIES

APPROVED 01/25/2018 DATE
JOHN PURDY
ENGINEERING MANAGER

APPROVED 01/25/2018 DATE
IFTEKHAR AHMAD / DIPANKAR SENGUPTA
ENGINEER OF RECORD

REHABILITATION OF PARKING GARAGES
STANDARD STRUCTURAL REPAIR DETAILS

TYPICAL REPAIR DETAILS 9 OF 19

M NO.	CONTRACT NO.	SCALE	DRAWING NO.	SHEET NO.
M1301	FQ18064	AS NOTED	S-509	492 of 504

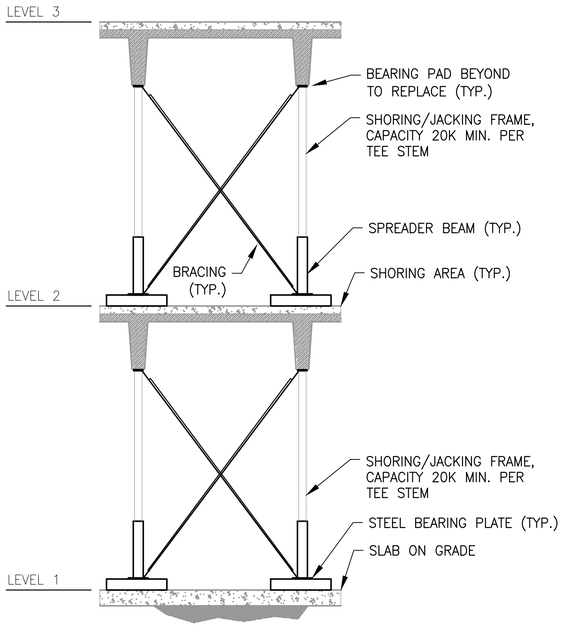

TYPICAL SCHEMATIC DOUBLE TEE BEAM SHORING DETAIL

SHORIING NOTES:

1. CONSTRUCTION LOADS:

   ROOF 50 PSF
   FLOOR 50 PSF

2. SHORING REQUIRED FOR CONCRETE REPAIR AT CORBELS AND REPLACEMENT OF BEARING PADS.
3. SEE PROJECT SPECIFICATIONS FOR SHORING REMOVAL CRITERIA.
4. SHORING SHALL BE EXTENDED FROM LEVEL WHERE WORK IS TO BE PERFORMED, DOWN TO FOUNDATION LEVEL OR A MINIMUM OF THREE LEVEL BELOW.
5. CONTRACTOR SHALL SUBMIT A SHORING PLAN AND PROCEDURE FOR JACKING PRECAST DOUBLE TEES FOR REVIEW AND APPROVAL PRIOR TO COMMENCEMENT OF WORK. JACKING PROCEDURE SHALL INCLUDE THE EFFECTS OF JACKING ON ADJOINING PRECAST DOUBLE TEE BEAMS AND ON TOPPING.
6. CONTRACTOR SHALL DESIGN JACKING FRAME WITH A MINIMUM CAPACITY AS SHOWN ON DETAIL.
7. JACKING OF PRECAST DOUBLE TEE BEAMS AND REPLACEMENT OF BEARING PADS SHALL BE PERFORMED PRIOR TO PERFORMING DECK SURFACE REPAIRS.
8. THE CONTRACTOR SHALL FIELD VERIFY THE ALLOWABLE SOIL BEARING VALUE OR USE VALUES STATED IN AS-BUILT DRAWINGS.
9. CONTRACTOR SHALL EXERCISE CAUTION DURING SHORING TO PREVENT INSTABILITY DUE TO CROSS SLOPE OF PRECAST DOUBLE TEE BEAMS.

MISALIGNED DOUBLE TEE BEAM BERING PAD

18 / S-510 TYPICAL SHORING DETAIL FOR DOUBLE TEE BEARING PAD REPLACEMENT

NOT TO SCALE

"PROFESSIONAL CERTIFICATION: I HEREBY CERTIFY THAT THESE DOCUMENTS WERE PREPARED OR APPROVED BY ME, AND THAT I AM A DULY LICENSED PROFESSIONAL ENGINEER UNDER THE LAWS OF THE STATE OF MARYLAND."

LICENSE No. 34339

EXPIRATION DATE: 06/17/2019

COMMONWEALTH OF VIRGINIA — DIPANKAR SENGUPTA — Lic. No. 0402043677 — 01-25-2018 — PROFESSIONAL ENGINEER

STATE OF MARYLAND — DIPANKAR SENGUPTA — No. 34339 — PROFESSIONAL ENGINEER

COMMONWEALTH OF VIRGINIA — IFTEKHAR AHMAD — Lic. No. 0402050670 — 01/25/2018 — PROFESSIONAL ENGINEER

GFP A Gannett Fleming/Parsons JOINT VENTURE

STATE OF MARYLAND — IFTEKHAR AHMAD — No. 42582 — PROFESSIONAL ENGINEER

"PROFESSIONAL CERTIFICATON: I HEREBY CERTIFY THAT THESE DOCUMENTS WERE PREPARED OR APPROVED BY ME, AND THAT I AM A DULY LICENSED PROFESSIONAL ENGINEER UNDER THE LAWS OF THE STATE OF MARYLAND."

LICENSE No. 42582

EXPIRATIONDATE: 08/13/2018

- COMAR 09.23.0310

DESIGNED	M. PARK	01/2018 DATE
DRAWN	L. NGUYEN	01/2018 DATE
CHECKED	L. KATSMAN	01/2018 DATE

REFERENCE DRAWINGS

NUMBER	TITLE

REVISIONS

DATE	NUM	DESCRIPTION
01/25/2018	0	FINAL SUBMITTAL

WASHINGTON METROPOLITAN AREA TRANSIT AUTHORITY

OFFICE OF THE CHIEF OPERATING OFFICER
IRPG - FIXED FACILITIES

APPROVED 01/25/2018 DATE
JOHN PURDY
ENGINEERING MANAGER

APPROVED 01/25/2018 DATE
IFTEKHAR AHMAD / DIPANKAR SENGUPTA
ENGINEER OF RECORD

REHABILITATION OF PARKING GARAGES
STANDARD STRUCTURAL REPAIR DETAILS

TYPICAL REPAIR DETAILS 10 OF 19

M NO.	CONTRACT NO.	SCALE	DRAWING NO.	SHEET NO.
M1301	FQ18064	AS NOTED	S-510	493 of 504

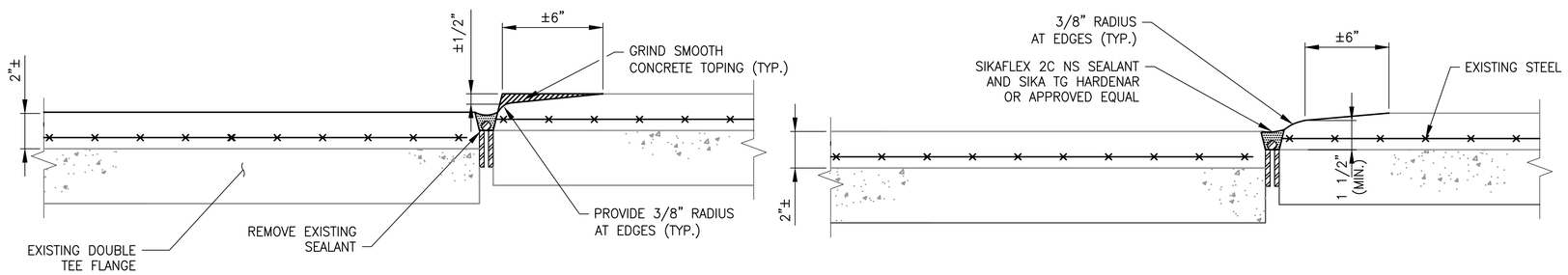

19
S-511

TYPICAL UNEVEN JOINT REPAIR DETAIL AT DOUBLE TEE FLANGES

NOT TO SCALE

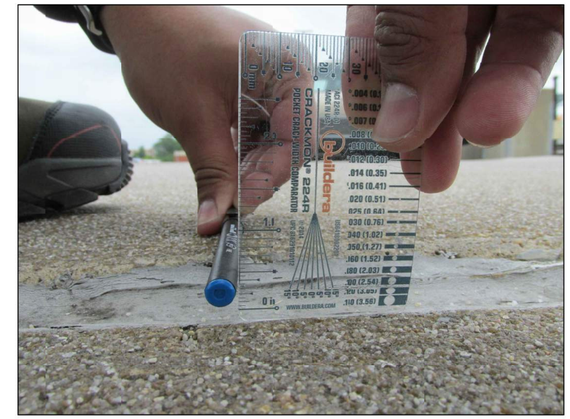

TYPICAL UNEVEN JOINT AT DOUBLE TEE FLANGES

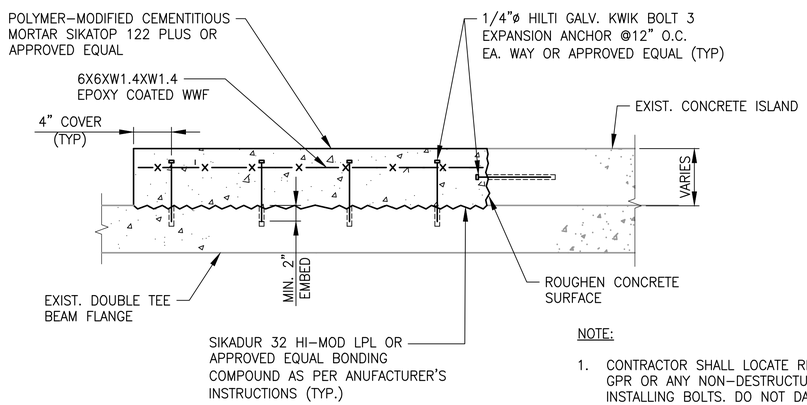

NOTE:

1. CONTRACTOR SHALL LOCATE REBAR USING GPR OR ANY NON-DESTRUCTUVE DEVICE PRIOR TO INSTALLING BOLTS. DO NOT DAMAGE EXISTING REBAR.

20
S-511

TYPICAL CONCRETE CURB REPAIR DETAIL

NOT TO SCALE

TYPICAL CONCRETE CURB DEFECT

"PROFESSIONAL CERTIFICATION: I HEREBY CERTIFY THAT THESE DOCUMENTS WERE PREPARED OR APPROVED BY ME, AND THAT I AM A DULY LICENSED PROFESSIONAL ENGINEER UNDER THE LAWS OF THE STATE OF MARYLAND."

LICENSE No. 34339

EXPIRATION DATE: 06/17/2019

COMMONWEALTH OF VIRGINIA — DIPANKAR SENGUPTA — Lic. No. 0402043677 — 01-25-2018 — PROFESSIONAL ENGINEER

STATE OF MARYLAND — DIPANKAR SENGUPTA — 34339 — PROFESSIONAL ENGINEER

COMMONWEALTH OF VIRGINIA — IFTEKHAR AHMAD — Lic. No. 0402050670 — 01/25/2018 — PROFESSIONAL ENGINEER

GFP A Gannett Fleming/Parsons JOINT VENTURE

STATE OF MARYLAND — IFTEKHAR AHMAD — No. 42582 — PROFESSIONAL ENGINEER

"PROFESSIONAL CERTIFICATION: I HEREBY CERTIFY THAT THESE DOCUMENTS WERE PREPARED OR APPROVED BY ME, AND THAT I AM A DULY LICENSED PROFESSIONAL ENGINEER UNDER THE LAWS OF THE STATE OF MARYLAND."

LICENSE No. 42582

EXPIRATIONDATE: 08/13/2018

- COMAR 09.23.0310

DESIGNED	M. PARK	01/2018 DATE
DRAWN	L. NGUYEN	01/2018 DATE
CHECKED	L. KATSMAN	01/2018 DATE

REFERENCE DRAWINGS

NUMBER	TITLE

REVISIONS

DATE	NUM	DESCRIPTION
01/25/2018	0	FINAL SUBMITTAL

WASHINGTON METROPOLITAN AREA TRANSIT AUTHORITY

OFFICE OF THE CHIEF OPERATING OFFICER
IRPG - FIXED FACILITIES

APPROVED 01/25/2018 DATE
JOHN PURDY
ENGINEERING MANAGER

APPROVED 01/25/2018 DATE
IFTEKHAR AHMAD / DIPANKAR SENGUPTA
ENGINEER OF RECORD

REHABILITATION OF PARKING GARAGES
STANDARD STRUCTURAL REPAIR DETAILS

TYPICAL REPAIR DETAILS 11 OF 19

M NO.	CONTRACT NO.	SCALE	DRAWING NO.	SHEET NO.
M1301	FQ18064	NOT TO SCALE	S-511	494 of 504

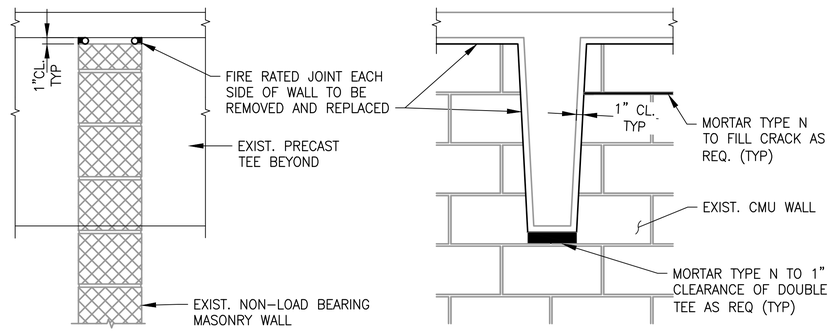

21 S-512 TYPICAL CMU WALL CRACK REPAIR AT DOUBLE TEE

NOT TO SCALE

NOTES:

1. JOINT SYSTEM – MAX SEPARATION BETWEEN BOTTOM OF FLOOR AND TOP OF WALL (AT TIME OF INSTALLATION OF JOINT SYSTEM) IS 1 IN. (25 MM). THE JOINT SYSTEM IS DESIGNED TO ACCOMMODATE A MAX 25 PERCENT COMPRESSION FROM ITS INSTALLED WIDTH. THE JOINT SYSTEM CONSISTS OF A PACKING OR FORMING MATERIAL AND A FILL MATERIAL BETWEEN THE TOP OF THE WALL AND THE BOTTOM OF THE FLOOR, AS FOLLOWS:

   A.) PACKING MATERIAL (OPTIONAL, NOT SHOWN): POLYURETHANE FOAM BACKER ROD FIRMLY PACKED INTO JOINT OPENING AS A PERMANENT FORM AND RECESSED FROM EACH SURFACE OF WALL TO ACCOMMODATE THE REQUIRED THICKNESS OF FILL MATERIAL.

   B.) FORMING MATERIAL (OPTIONAL, NOT SHOWN): MIN 3/4" WIDTH OF 4 PCF MINERAL WOOL BATT INSULATION COMPRESSED 50% AND PACKED INTO THE GAP BETWEEN THE TOP OF THE WALL AND DOUBLE TEE ON BOTH SIDES OF THE WALL.

   C.) FILL, VOID OR CAVITY MATERIAL: A MIN 1/2" THICKNESS OF FILL MATERIAL INSTALLED ON EACH SIDE OF THE WALL BETWEEN THE TOP OF THE WALL AND THE BOTTOM OF THE DOUBLE TEE.

TYPICAL CMU WALL CRACK AT DOUBLE TEE

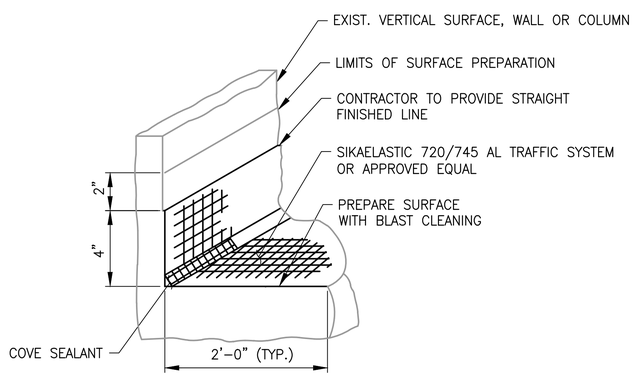

ISOMETRIC

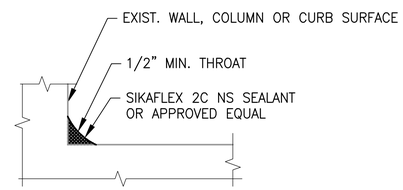

NOTES:

1. PREPARE AND ALLOW FOR PRIMER TO CURE PROPERLY PRIOR TO INSTALLING SEAL.
2. INSTALLATION OF COVE SEALANT, AND REMOVAL OF EXISTING SEALANTS ARE INCIDENTAL TO THIS WORK.

COVE SEALANT SECTION

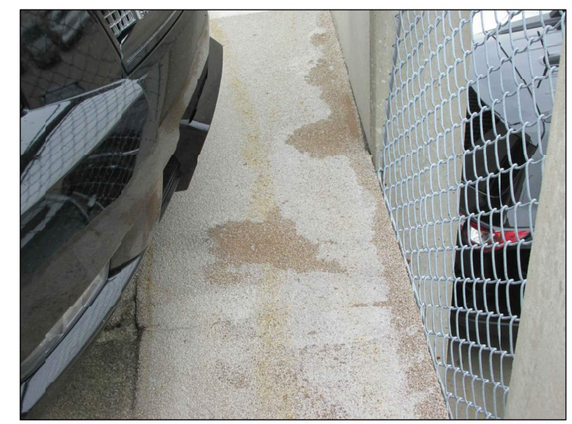

DETERIORATED TRAFFIC TOPPING AT PARAPET WALL

22 S-512 TYPICAL TRAFFIC TOPPIING REPAIR DETAIL AT PARAPET WALL

NOT TO SCALE

"PROFESSIONAL CERTIFICATION: I HEREBY CERTIFY THAT THESE DOCUMENTS WERE PREPARED OR APPROVED BY ME, AND THAT I AM A DULY LICENSED PROFESSIONAL ENGINEER UNDER THE LAWS OF THE STATE OF MARYLAND."

LICENSE No. 34339

EXPIRATION DATE: 06/17/2019

COMMONWEALTH OF VIRGINIA — DIPANKAR SENGUPTA — Lic. No. 0402043677 — 01-25-2018 — PROFESSIONAL ENGINEER

STATE OF MARYLAND — DIPANKAR SENGUPTA — 34339 — PROFESSIONAL ENGINEER

COMMONWEALTH OF VIRGINIA — IFTEKHAR AHMAD — Lic. No. 0402050670 — 01/25/2018 — PROFESSIONAL ENGINEER

GFP A Gannett Fleming/Parsons JOINT VENTURE

STATE OF MARYLAND — IFTEKHAR AHMAD — No. 42582 — PROFESSIONAL ENGINEER

"PROFESSIONAL CERTIFICATON: I HEREBY CERTIFY THAT THESE DOCUMENTS WERE PREPARED OR APPROVED BY ME, AND THAT I AM A DULY LICENSED PROFESSIONAL ENGINEER UNDER THE LAWS OF THE STATE OF MARYLAND."

LICENSE No. 42582

EXPIRATIONDATE: 08/13/2018

- COMAR 09.23.0310

DESIGNED	M. PARK	01/2018 DATE
DRAWN	L. NGUYEN	01/2018 DATE
CHECKED	L. KATSMAN	01/2018 DATE

REFERENCE DRAWINGS

NUMBER	TITLE

REVISIONS

DATE	NUM	DESCRIPTION
01/25/2018	0	FINAL SUBMITTAL

WASHINGTON METROPOLITAN AREA TRANSIT AUTHORITY

OFFICE OF THE CHIEF OPERATING OFFICER
IRPG - FIXED FACILITIES

APPROVED 01/25/2018 DATE
JOHN PURDY
ENGINEERING MANAGER

APPROVED 01/25/2018 DATE
IFTEKHAR AHMAD / DIPANKAR SENGUPTA
ENGINEER OF RECORD

REHABILITATION OF PARKING GARAGES
STANDARD STRUCTURAL REPAIR DETAILS

TYPICAL REPAIR DETAILS 12 OF 19

M NO.	CONTRACT NO.	SCALE	DRAWING NO.	SHEET NO.
M1301	FQ18064	NOT TO SCALE	S-512	495 of 504

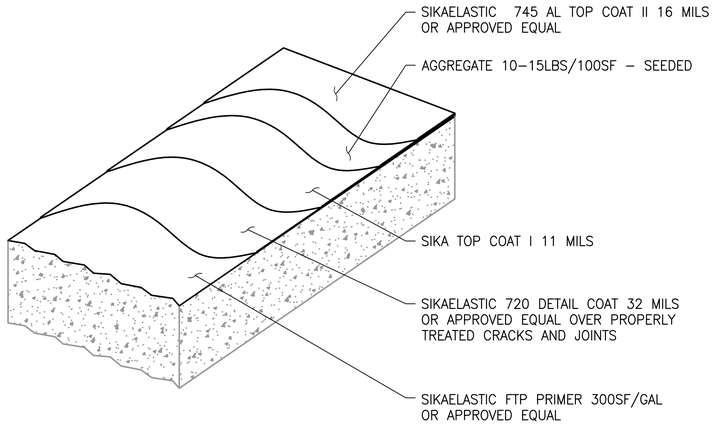

NOTES:

1. ENSURE EXISTING COATING HAS SUFFICIENT BOND WITH CONCRETE.
2. TEST AN AREA FOR COMPATIBILITY IN ACCORDANCE WITH MANUFACTURER RECOMMENDATIONS.
3. USE SIKALASTIC 720/745 AL OR APPROVED EQUAL.

23 / S–513 TYPICAL TRAFFIC BEARING MEMBRANE

NOT TO SCALE

DETERIORATED TRAFFIC TOPPING

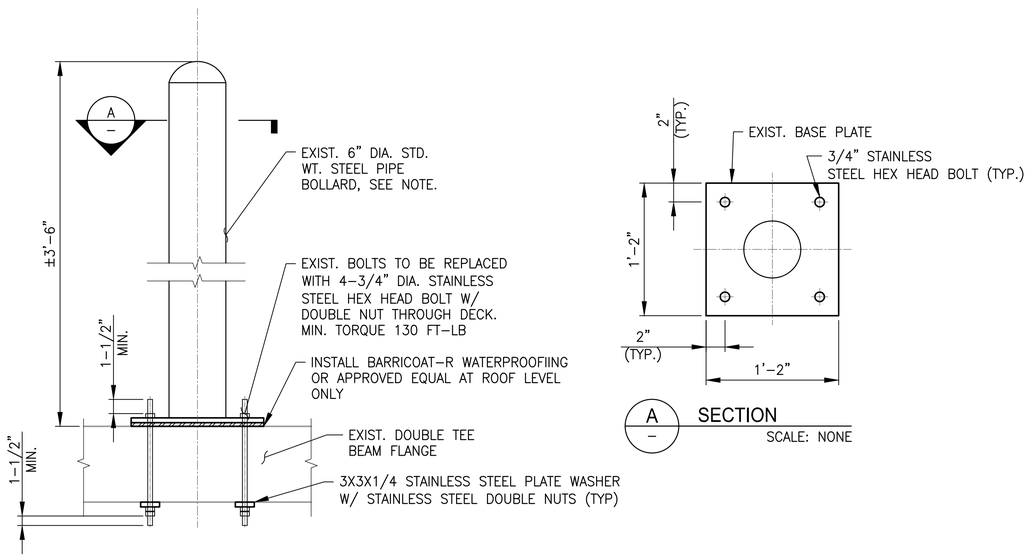

PIPE BOLLARD ANCHOR BOLT REPLACEMENT DETAIL

NOTE: SEE ARCHITECTURAL SPECIFICATION FOR BOLLARD PAINTING REQUIREMENTS.

24 / S–513 TYPICAL TRAFFIC BOLLARD REPAIR DETAIL

NOT TO SCALE

TYPICAL DEFECT AT TRAFFIC BOLLARD

"PROFESSIONAL CERTIFICATION: I HEREBY CERTIFY THAT THESE DOCUMENTS WERE PREPARED OR APPROVED BY ME, AND THAT I AM A DULY LICENSED PROFESSIONAL ENGINEER UNDER THE LAWS OF THE STATE OF MARYLAND."

LICENSE No. 34339

EXPIRATION DATE: 06/17/2019

COMMONWEALTH OF VIRGINIA — DIPANKAR SENGUPTA — Lic. No. 0402043677 — 01-25-2018 — PROFESSIONAL ENGINEER

STATE OF MARYLAND — DIPANKAR SENGUPTA — 34339 — PROFESSIONAL ENGINEER

COMMONWEALTH OF VIRGINIA — IFTEKHAR AHMAD — Lic. No. 0402050570 — 01/25/2018 — PROFESSIONAL ENGINEER

GFP A Gannett Fleming/Parsons JOINT VENTURE

STATE OF MARYLAND — IFTEKHAR AHMAD — No. 42582 — PROFESSIONAL ENGINEER

"PROFESSIONAL CERTIFICATON: I HEREBY CERTIFY THAT THESE DOCUMENTS WERE PREPARED OR APPROVED BY ME, AND THAT I AM A DULY LICENSED PROFESSIONAL ENGINEER UNDER THE LAWS OF THE STATE OF MARYLAND."

LICENSE No. 42582

EXPIRATION DATE: 08/13/2018

- COMAR 09.23.0310

DESIGNED	M. PARK	01/2018 DATE
DRAWN	L. NGUYEN	01/2018 DATE
CHECKED	L. KATSMAN	01/2018 DATE

REFERENCE DRAWINGS

NUMBER	TITLE

REVISIONS

DATE	NUM	DESCRIPTION
01/25/2018	0	FINAL SUBMITTAL

WASHINGTON METROPOLITAN AREA TRANSIT AUTHORITY

OFFICE OF THE CHIEF OPERATING OFFICER
IRPG - FIXED FACILITIES

APPROVED 01/25/2018 DATE
JOHN PURDY
ENGINEERING MANAGER

APPROVED 01/25/2018 DATE
IFTEKHAR AHMAD / DIPANKAR SENGUPTA
ENGINEER OF RECORD

REHABILITATION OF PARKING GARAGES
STANDARD STRUCTURAL REPAIR DETAILS

TYPICAL REPAIR DETAILS 13 OF 19

M NO.	CONTRACT NO.	SCALE	DRAWING NO.	SHEET NO.
M1301	FQ18064	NOT TO SCALE	S-513	496 of 504

25 / S-514 TYPICAL MISSING PLASTIC CAP AT VERTICAL LIFTING POINT

NOT TO SCALE

27 / S-514 TYPICAL EFFLORESCENCE / RUST STAINING ON CONCRETE

NOT TO SCALE

28 / S-514 TYPICAL MORTAR / GROUT DETERIORATION

NOT TO SCALE

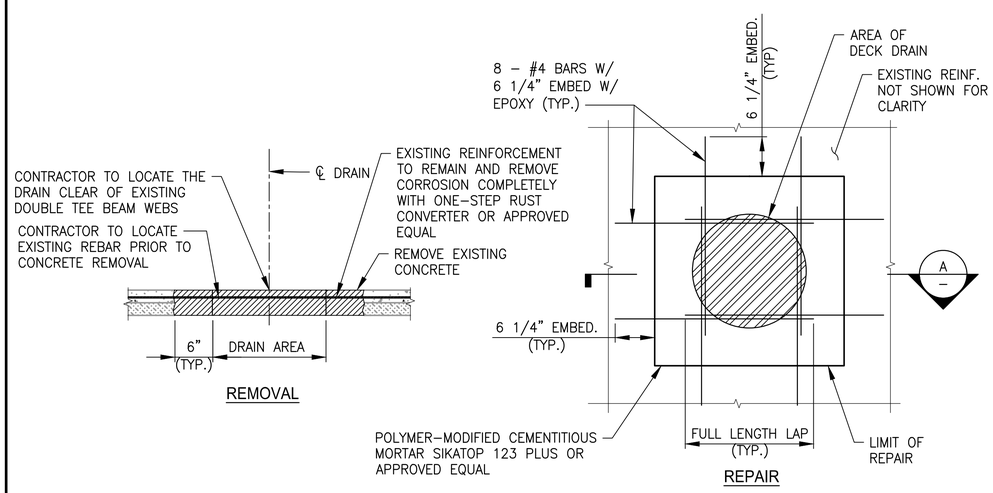

26 / S-514 TYPICAL PONDING AREA WITH DRAIN INSTALLATION DETAIL

SCALE: NOT TO SCALE

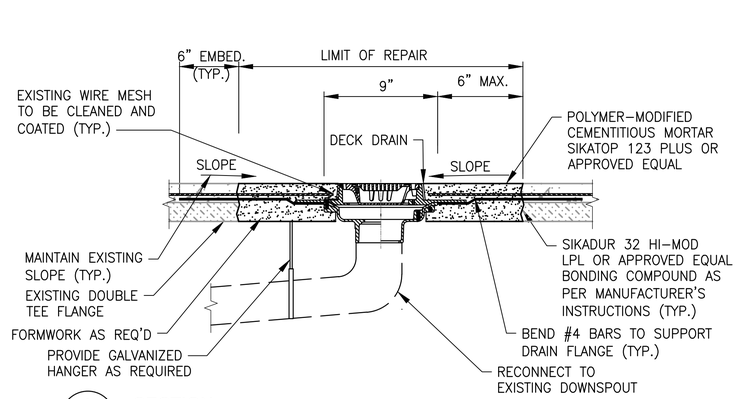

A / – SECTION

SCALE: NOT TO SCALE

NOTE: SEE PLUMBING DRAWINGS FOR MORE INFORMATION.

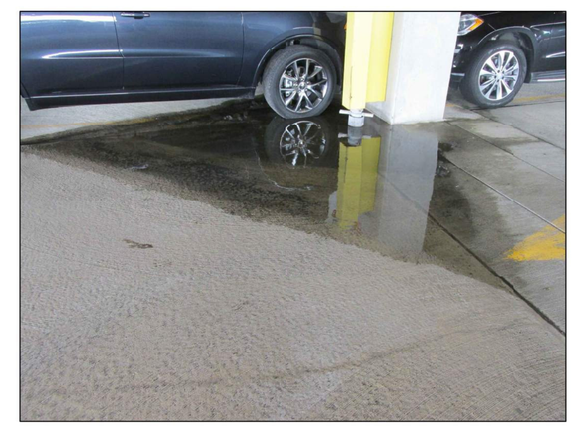

TYPICAL WATER PONDING

"PROFESSIONAL CERTIFICATION: I HEREBY CERTIFY THAT THESE DOCUMENTS WERE PREPARED OR APPROVED BY ME, AND THAT I AM A DULY LICENSED PROFESSIONAL ENGINEER UNDER THE LAWS OF THE STATE OF MARYLAND."

LICENSE No. 34339

EXPIRATION DATE: 06/17/2019

COMMONWEALTH OF VIRGINIA — DIPANKAR SENGUPTA — Lic. No. 0402043677 — 01-25-2018 — PROFESSIONAL ENGINEER

STATE OF MARYLAND — DIPANKAR SENGUPTA — 34339 — PROFESSIONAL ENGINEER

COMMONWEALTH OF VIRGINIA — IFTEKHAR AHMAD — Lic. No. 0402050670 — 01/25/2018 — PROFESSIONAL ENGINEER

GFP A Gannett Fleming/Parsons JOINT VENTURE

STATE OF MARYLAND — IFTEKHAR AHMAD — No. 42582 — PROFESSIONAL ENGINEER

"PROFESSIONAL CERTIFICATON: I HEREBY CERTIFY THAT THESE DOCUMENTS WERE PREPARED OR APPROVED BY ME, AND THAT I AM A DULY LICENSED PROFESSIONAL ENGINEER UNDER THE LAWS OF THE STATE OF MARYLAND."

LICENSE No. 42582

EXPIRATIONDATE: 08/13/2018

- COMAR 09.23.0310

DESIGNED	M. PARK	01/2018 DATE
DRAWN	L. NGUYEN	01/2018 DATE
CHECKED	L. KATSMAN	01/2018 DATE

REFERENCE DRAWINGS

NUMBER	TITLE

REVISIONS

DATE	NUM	DESCRIPTION
01/25/2018	0	FINAL SUBMITTAL

WASHINGTON METROPOLITAN AREA TRANSIT AUTHORITY

OFFICE OF THE CHIEF OPERATING OFFICER

IRPG - FIXED FACILITIES

APPROVED 01/25/2018 DATE
JOHN PURDY
ENGINEERING MANAGER

APPROVED 01/25/2018 DATE
IFTEKHAR AHMAD / DIPANKAR SENGUPTA
ENGINEER OF RECORD

REHABILITATION OF PARKING GARAGES
STANDARD STRUCTURAL REPAIR DETAILS

TYPICAL REPAIR DETAILS 14 OF 19

M NO.	CONTRACT NO.	SCALE	DRAWING NO.	SHEET NO.
M1301	FQ18064	NOT TO SCALE	S-514	497 of 504

SANDBLAST CLEAN, PRIME AND PAINT CONNECTION PLATE CORRODED AREA. APPLY EPOXY SEALANT.

29 / S-515 TYPICAL CONNECTION PLATE CORROSION

NOT TO SCALE

CLEAN OUT CRACK/ HONEY COMB BY HIGH PRESSURE AIR BLAST AND VACUUM CLEAN SURFACE. COAT AREA WITH WATERPROOFING.

30 / S-515 TYPICAL MAP CRACKING / HONEY COMB

NOT TO SCALE

CLEAN WALL SURFACE AND IDENTIFY CRACK LOCATION. PERFORM VERTICAL CRACK REPAIR.

31 / S-515 TYPICAL WATER LEAKING

NOT TO SCALE

NOTE: FOR VERTICAL CRACK, SEE REPAIR DETAIL 9 SHEET S-505

REMOVE CORRODED BOLT. SANDBLAST CLEAN, PRIME AND PAINT CORRODED AREA. INSTALL NEW BOLT.

32 / S-515 TYPICAL CORRODED / MISSING ANCHOR BOLTS

NOT TO SCALE

COMMONWEALTH OF VIRGINIA
DIPANKAR SENGUPTA
Lic. No. 0402045677
01-25-2018
PROFESSIONAL ENGINEER

"PROFESSIONAL CERTIFICATION: I HEREBY CERTIFY THAT THESE DOCUMENTS WERE PREPARED OR APPROVED BY ME, AND THAT I AM A DULY LICENSED PROFESSIONAL ENGINEER UNDER THE LAWS OF THE STATE OF MARYLAND."

LICENSE No. 34339

EXPIRATION DATE: 06/17/2019

STATE OF MARYLAND
DIPANKAR SENGUPTA
No. 34339
PROFESSIONAL ENGINEER

COMMONWEALTH OF VIRGINIA
IFTEKHAR AHMAD
Lic. No. 0402050670
01/25/2018
PROFESSIONAL ENGINEER

GFP A Gannett Fleming/Parsons JOINT VENTURE

STATE OF MARYLAND
IFTEKHAR AHMAD
No. 42582
PROFESSIONAL ENGINEER

"PROFESSIONAL CERTIFICATON: I HEREBY CERTIFY THAT THESE DOCUMENTS WERE PREPARED OR APPROVED BY ME, AND THAT I AM A DULY LICENSED PROFESSIONAL ENGINEER UNDER THE LAWS OF THE STATE OF MARYLAND."

LICENSE No. 42582

EXPIRATIONDATE: 08/13/2018

- COMAR 09.23.0310

DESIGNED	M. PARK	01/2018 DATE
DRAWN	L. NGUYEN	01/2018 DATE
CHECKED	L. KATSMAN	01/2018 DATE

REFERENCE DRAWINGS

NUMBER	TITLE

REVISIONS

DATE	NUM	DESCRIPTION
01/25/2018	0	FINAL SUBMITTAL

WASHINGTON METROPOLITAN AREA TRANSIT AUTHORITY

OFFICE OF THE CHIEF OPERATING OFFICER
IRPG - FIXED FACILITIES

APPROVED 01/25/2018 DATE
JOHN PURDY
ENGINEERING MANAGER

APPROVED 01/25/2018 DATE
IFTEKHAR AHMAD / DIPANKAR SENGUPTA
ENGINEER OF RECORD

REHABILITATION OF PARKING GARAGES
STANDARD STRUCTURAL REPAIR DETAILS

TYPICAL REPAIR DETAILS 15 OF 19

M NO.	CONTRACT NO.	SCALE	DRAWING NO.	SHEET NO.
M1301	FQ18064	NOT TO SCALE	S-515	498 of 504

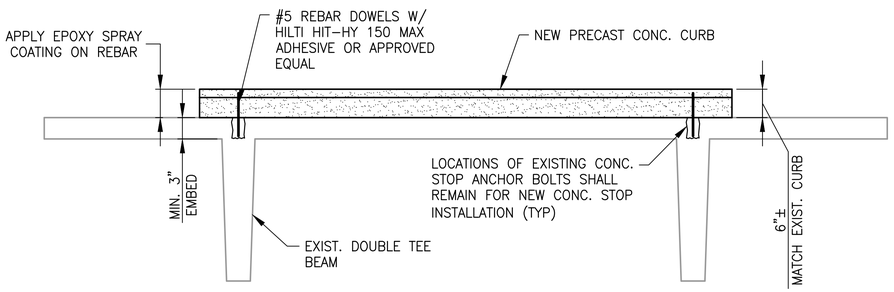

33 / S-516 TYPICAL CONCRETE STOP CURB REPAIR DETAIL

NOT TO SCALE

DAMAGED CONCRETE STOP CURB

34 / S-516 TYPICAL DISPLACED ANGLE/ MISSING ANCHOR AT EXPANSION JOINT SUPPORT

NOT TO SCALE

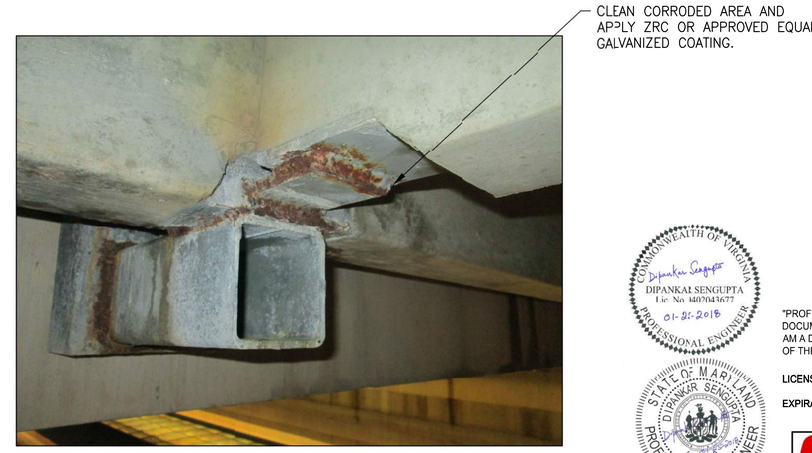

35 / S-516 TYPICAL CORROSION AT WELDING

NOT TO SCALE

COMMONWEALTH OF VIRGINIA
DIPANKAR SENGUPTA
Lic. No. 440043677
01-25-2018
PROFESSIONAL ENGINEER

STATE OF MARYLAND
DIPANKAR SENGUPTA
No. 34339
PROFESSIONAL ENGINEER

COMMONWEALTH OF VIRGINIA
IFTEKHAR AHMAD
Lic. No. 0402050570
01/25/2018
PROFESSIONAL ENGINEER

"PROFESSIONAL CERTIFICATION: I HEREBY CERTIFY THAT THESE DOCUMENTS WERE PREPARED OR APPROVED BY ME, AND THAT I AM A DULY LICENSED PROFESSIONAL ENGINEER UNDER THE LAWS OF THE STATE OF MARYLAND."

LICENSE No. 34339

EXPIRATION DATE: 08/17/2019

GFP A Gannett Fleming/Parsons JOINT VENTURE

STATE OF MARYLAND
IFTEKHAR AHMAD
No. 42582
PROFESSIONAL ENGINEER

"PROFESSIONAL CERTIFICATON: I HEREBY CERTIFY THAT THESE DOCUMENTS WERE PREPARED OR APPROVED BY ME, AND THAT I AM A DULY LICENSED PROFESSIONAL ENGINEER UNDER THE LAWS OF THE STATE OF MARYLAND."

LICENSE No. 42582

EXPIRATION DATE: 08/13/2018

- COMAR 09.23.0310

DESIGNED	M. PARK	01/2018 DATE
DRAWN	L. NGUYEN	01/2018 DATE
CHECKED	L. KATSMAN	01/2018 DATE

REFERENCE DRAWINGS

NUMBER	TITLE

REVISIONS

DATE	NUM	DESCRIPTION
01/25/2018	0	FINAL SUBMITTAL

WASHINGTON METROPOLITAN AREA TRANSIT AUTHORITY

OFFICE OF THE CHIEF OPERATING OFFICER
IRPG - FIXED FACILITIES

APPROVED 01/25/2018 DATE
JOHN PURDY
ENGINEERING MANAGER

APPROVED 01/25/2018 DATE
IFTEKHAR AHMAD / DIPANKAR SENGUPTA
ENGINEER OF RECORD

REHABILITATION OF PARKING GARAGES
STANDARD STRUCTURAL REPAIR DETAILS

TYPICAL REPAIR DETAILS 16 OF 19

M NO.	CONTRACT NO.	SCALE	DRAWING NO.	SHEET NO.
M1301	FQ18064	NOT TO SCALE	S-516	499 of 504

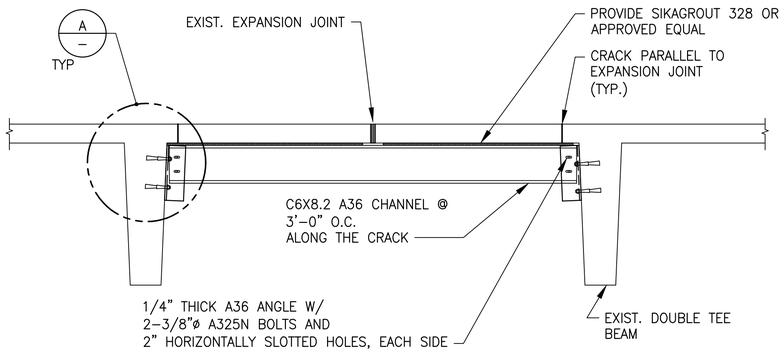

NOTE: FOR SEVERE LONGITUDINAL CRACKS AT DOUBLE TEES NOT LOCATED IN EXPANSION JOINT, PROVIDE THIS SAME REPAIR DETAIL WITH CHANNEL SPACING AT 10'–0" O.C. FOR MINOR LONGITUDINAL CRACKS, SEE DETAIL 40/S–519.

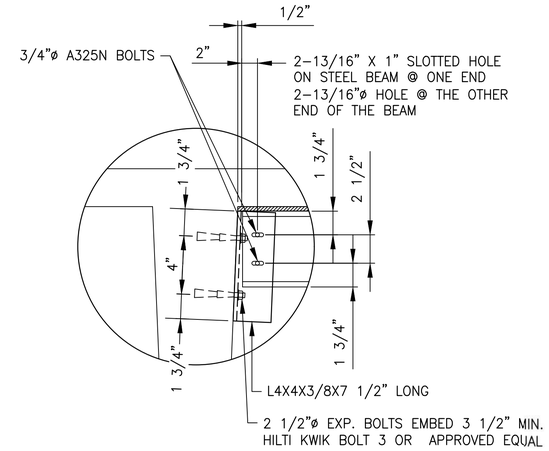

A / S–517 SECTION

NOT TO SCALE

36 / S–517 TYPICAL REPAIR AT CRACK PARALLEL TO EXPANSION JOINT

NOT TO SCALE

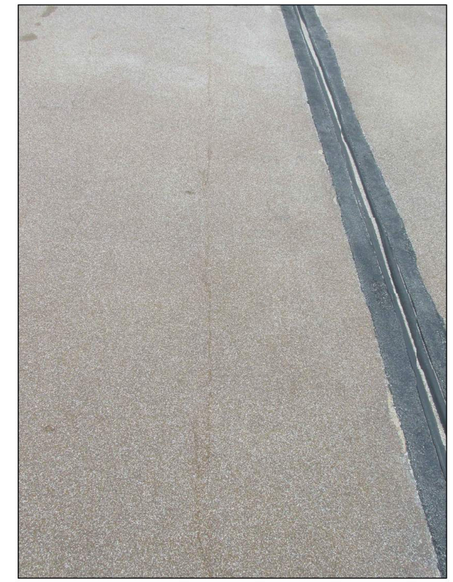

CRACK PARALLEL TO EXPANSION JOINT

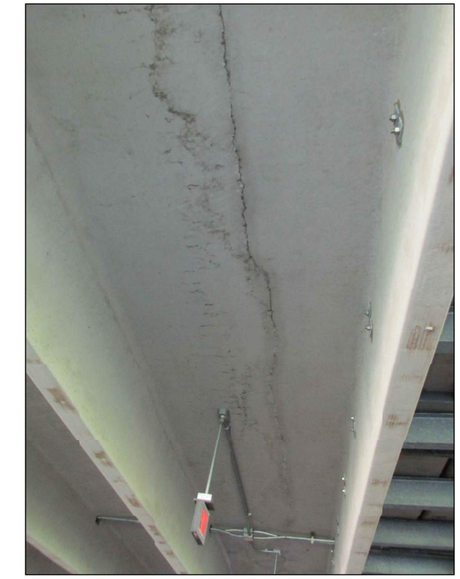

SEVERE LONGITUDINAL CRACK AT DOUBLE TEE

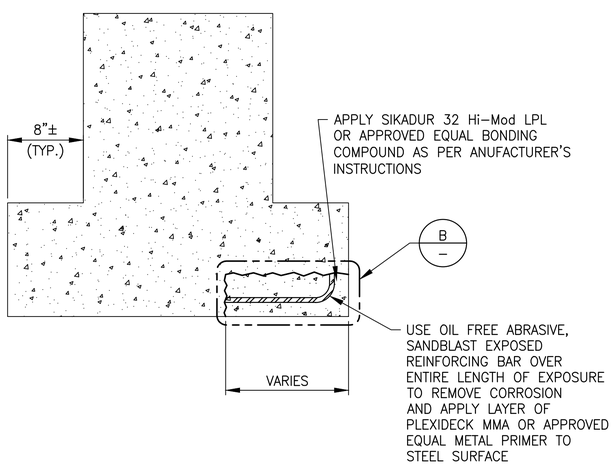

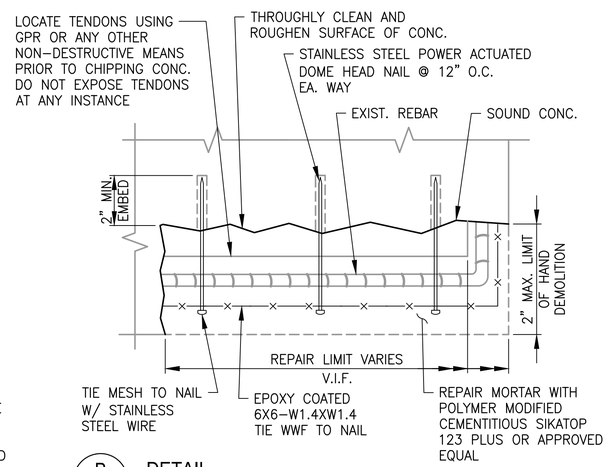

B / S–517 DETAIL

NOT TO SCALE

37 / S–517 TYPICAL INVERTED TEE SPALL REPAIR DETAIL

NOT TO SCALE

DETERIORATED INVERTED TEE SPALL

"PROFESSIONAL CERTIFICATION: I HEREBY CERTIFY THAT THESE DOCUMENTS WERE PREPARED OR APPROVED BY ME, AND THAT I AM A DULY LICENSED PROFESSIONAL ENGINEER UNDER THE LAWS OF THE STATE OF MARYLAND."

LICENSE No. 34339

EXPIRATION DATE: 06/17/2019

STATE OF MARYLAND — DIPANKAR SENGUPTA — PROFESSIONAL ENGINEER

COMMONWEALTH OF VIRGINIA — DIPANKAR SENGUPTA Lic. No.0402043677 — PROFESSIONAL ENGINEER

COMMONWEALTH OF VIRGINIA — IFTEKHAR AHMAD Lic. No.0402050670 — PROFESSIONAL ENGINEER

GFP A Gannett Fleming/Parsons JOINT VENTURE

STATE OF MARYLAND — IFTEKHAR AHMAD — No. 42582 — PROFESSIONAL ENGINEER

"PROFESSIONAL CERTIFICATON: I HEREBY CERTIFY THAT THESE DOCUMENTS WERE PREPARED OR APPROVED BY ME, AND THAT I AM A DULY LICENSED PROFESSIONAL ENGINEER UNDER THE LAWS OF THE STATE OF MARYLAND."

LICENSE No. 42582

EXPIRATION DATE: 08/13/2018

- COMAR 09.23.0310

DESIGNED	M. PARK	01/2018 DATE
DRAWN	L. NGUYEN	01/2018 DATE
CHECKED	L. KATSMAN	01/2018 DATE

REFERENCE DRAWINGS

NUMBER	TITLE

REVISIONS

DATE	NUM	DESCRIPTION
01/25/2018	0	FINAL SUBMITTAL

WASHINGTON METROPOLITAN AREA TRANSIT AUTHORITY

OFFICE OF THE CHIEF OPERATING OFFICER

IRPG - FIXED FACILITIES

APPROVED 01/25/2018 DATE — JOHN PURDY, ENGINEERING MANAGER

APPROVED 01/25/2018 DATE — IFTEKHAR AHMAD / DIPANKAR SENGUPTA, ENGINEER OF RECORD

REHABILITATION OF PARKING GARAGES
STANDARD STRUCTURAL REPAIR DETAILS

TYPICAL REPAIR DETAILS 17 OF 19

M NO.	CONTRACT NO.	SCALE	DRAWING NO.	SHEET NO.
M1301	FQ18064	NOT TO SCALE	S-517	500 of 504

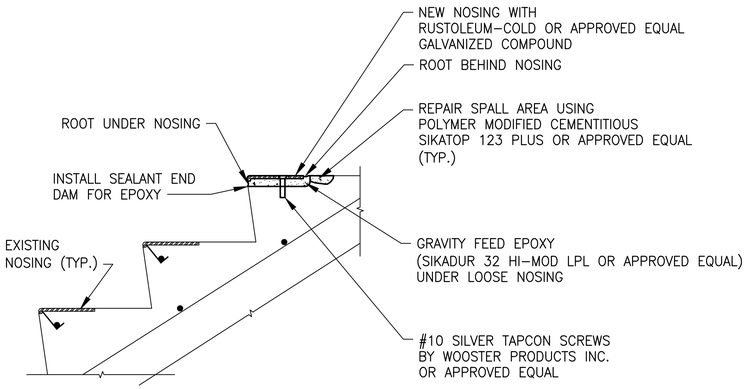

STAIR NOSING INSTALLATION W/ SPALL AT TREAD

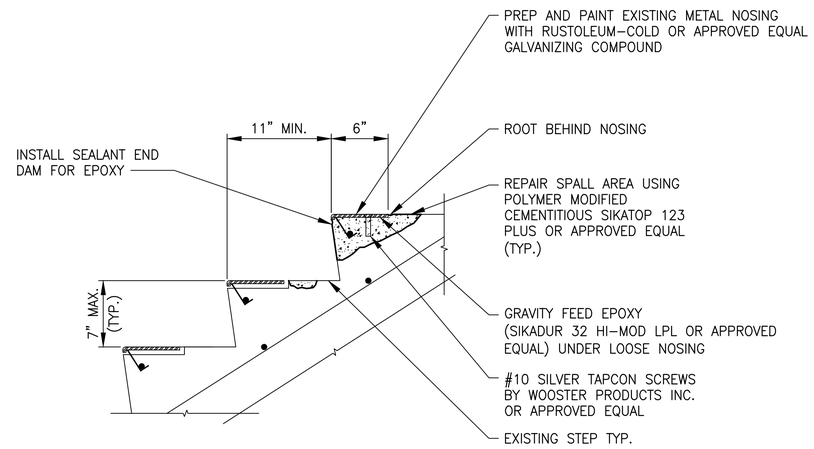

STAIR WITH SPALL

MISSING STAIR NOSING WITH SPALL AT TREAD

STAIR NOSING WITH SPALL AT RISER

NOTES:

1. UPON REMOVAL OF ALL DETERIORATED STEEL STAIR NOSING, CONCRETE TREADS AND RISERS TO BE POWER WASHED TO REMOVE EXISTING STAINING ASSOCIATED WITH THE CORROSION OF THE STEEL STAIR TREADS.
2. NEW NOSING SHALL BE ALUMINUM WITH A NON–SKID SURFACE.
3. CONTRACTOR TO REMOVE ALL DEMOLISHED MATERIALS PROMPTLY FROM SITE.
4. ALUMINUM NOSING REQUIRES BITUMINOUS COATING WHEN IN CONTACT WITH CONCRETE.

38 / S–518 TYPICAL STAIR NOSING REPAIR DETAIL

SCALE: NOT TO SCALE

"PROFESSIONAL CERTIFICATION: I HEREBY CERTIFY THAT THESE DOCUMENTS WERE PREPARED OR APPROVED BY ME, AND THAT I AM A DULY LICENSED PROFESSIONAL ENGINEER UNDER THE LAWS OF THE STATE OF MARYLAND."

LICENSE No. 34339

EXPIRATION DATE: 06/17/2019

COMMONWEALTH OF VIRGINIA — DIPANKAR SENGUPTA, Lic. No. 0402043677, 01-25-2018, PROFESSIONAL ENGINEER

STATE OF MARYLAND — DIPANKAR SENGUPTA, 34339, PROFESSIONAL ENGINEER

COMMONWEALTH OF VIRGINIA — IFTEKHAR AHMAD, Lic. No. 0402050670, 01/25/2018, PROFESSIONAL ENGINEER

GFP A Gannett Fleming/Parsons JOINT VENTURE

STATE OF MARYLAND — IFTEKHAR AHMAD, No. 42582, 01-25-2018, PROFESSIONAL ENGINEER

"PROFESSIONAL CERTIFICATON: I HEREBY CERTIFY THAT THESE DOCUMENTS WERE PREPARED OR APPROVED BY ME, AND THAT I AM A DULY LICENSED PROFESSIONAL ENGINEER UNDER THE LAWS OF THE STATE OF MARYLAND."

LICENSE No. 42582

EXPIRATIONDATE: 08/13/2018

- COMAR 09.23.0310

DESIGNED	M. PARK	01/2018 DATE
DRAWN	L. NGUYEN	01/2018 DATE
CHECKED	L. KATSMAN	01/2018 DATE

REFERENCE DRAWINGS

NUMBER	TITLE

REVISIONS

DATE	NUM	DESCRIPTION
01/25/2018	0	FINAL SUBMITTAL

WASHINGTON METROPOLITAN AREA TRANSIT AUTHORITY

OFFICE OF THE CHIEF OPERATING OFFICER
IRPG - FIXED FACILITIES

APPROVED 01/25/2018 DATE
JOHN PURDY
ENGINEERING MANAGER

APPROVED 01/25/2018 DATE
IFTEKHAR AHMAD / DIPANKAR SENGUPTA
ENGINEER OF RECORD

REHABILITATION OF PARKING GARAGES
STANDARD STRUCTURAL REPAIR DETAILS

TYPICAL REPAIR DETAILS 18 OF 19

M NO.	CONTRACT NO.	SCALE	DRAWING NO.	SHEET NO.
M1301	FQ18064	NOT TO SCALE	S-518	501 of 504

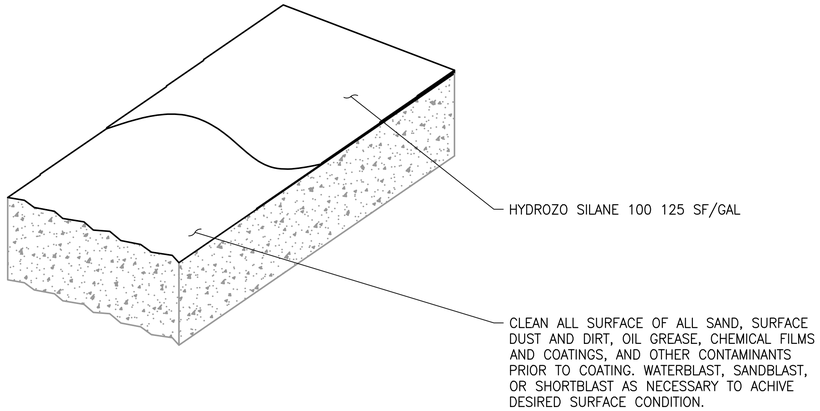

NOTES:

1. CAULKING AND SEALANT WORK MAYBE DONE BEFORE OR AFTER THE APPLICATION OF THE SEALER. ALLOW SEALANT TO FULLY CURED BEFORE APPLICATION OF HYDROZO SILANE 100.
2. DO NOT APPLY DURING INCLEMENT WEATHER OR WHEN INCLEMENT WEATHER IS ANTICIPATED WITHIN 12 HOURS.
3. PAINT LINE STRIPPING AFTER THE CURRING OF THE SEALER.

39 / S-519 TYPICAL SILANE SEALER COATING SYSTEM DETAIL (INTERMEDIATE LEVEL)

NOT TO SCALE

REPAIR CRACK WITH SIKADUR 31 HI-MOD GEL OR APPROVED EQUAL AFTER CLEANING CRACK SURFACE.

NOTE: FOR SEVERE LONGITUDINAL CRACK AT UNDERSIDE OF DOUBLE TEE, SEE DETAIL 36/S-517.

40 / S-519 TYPICAL MINOR LONGITUDINAL CRACK AT UNDERSIDE OF DOUBLE TEE

NOT TO SCALE

"PROFESSIONAL CERTIFICATION: I HEREBY CERTIFY THAT THESE DOCUMENTS WERE PREPARED OR APPROVED BY ME, AND THAT I AM A DULY LICENSED PROFESSIONAL ENGINEER UNDER THE LAWS OF THE STATE OF MARYLAND."

LICENSE No. 34339

EXPIRATION DATE: 06/17/2019

COMMONWEALTH OF VIRGINIA — DIPANKAR SENGUPTA Lic. No. 0402043677 — 01-25-2018 — PROFESSIONAL ENGINEER

STATE OF MARYLAND — DIPANKAR SENGUPTA — 34339 — PROFESSIONAL ENGINEER

COMMONWEALTH OF VIRGINIA — IFTEKHAR AHMAD Lic. No. 0402050570 — 01/25/2018 — PROFESSIONAL ENGINEER

GFP A Gannett Fleming/Parsons JOINT VENTURE

STATE OF MARYLAND — IFTEKHAR AHMAD — No. 42582 — PROFESSIONAL ENGINEER

"PROFESSIONAL CERTIFICATON: I HEREBY CERTIFY THAT THESE DOCUMENTS WERE PREPARED OR APPROVED BY ME, AND THAT I AM A DULY LICENSED PROFESSIONAL ENGINEER UNDER THE LAWS OF THE STATE OF MARYLAND."

LICENSE No. 42582

EXPIRATIONDATE: 08/13/2018

- COMAR 09.23.0310

DESIGNED	M. PARK	01/2018 DATE
DRAWN	L. NGUYEN	01/2018 DATE
CHECKED	L. KATSMAN	01/2018 DATE

REFERENCE DRAWINGS

NUMBER	TITLE

REVISIONS

DATE	NUM	DESCRIPTION
01/25/2018	0	FINAL SUBMITTAL

WASHINGTON METROPOLITAN AREA TRANSIT AUTHORITY

OFFICE OF THE CHIEF OPERATING OFFICER
IRPG - FIXED FACILITIES

APPROVED 01/25/2018 DATE
JOHN PURDY
ENGINEERING MANAGER

APPROVED 01/25/2018 DATE
IFTEKHAR AHMAD / DIPANKAR SENGUPTA
ENGINEER OF RECORD

REHABILITATION OF PARKING GARAGES
STANDARD STRUCTURAL REPAIR DETAILS

TYPICAL REPAIR DETAILS 19 OF 19

M NO.	CONTRACT NO.	SCALE	DRAWING NO.	SHEET NO.
M1301	FQ18064	NOT TO SCALE	S-519	502 of 504

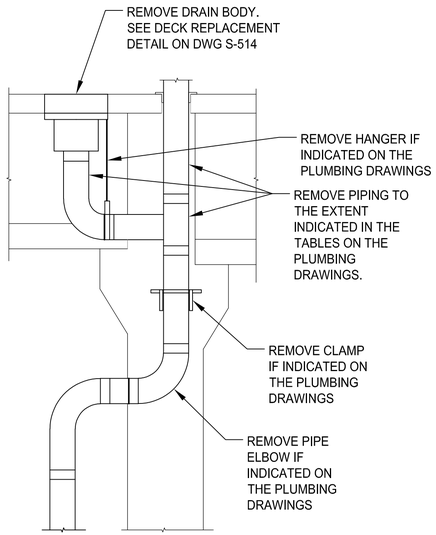

REMOVAL

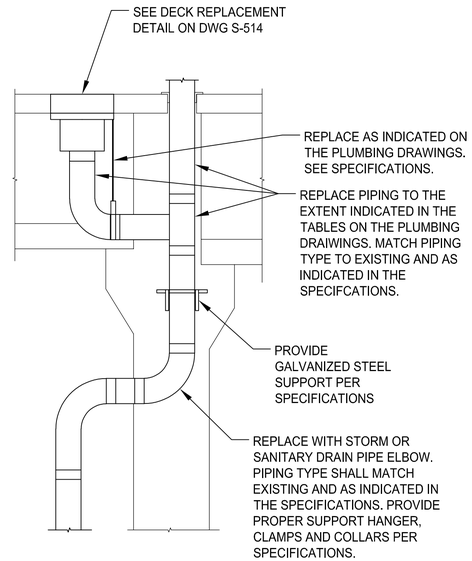

REPLACEMENT

1 P-500 TYPICAL STANDPIPE AND STORM DRAIN REPLACEMENT DETAILS

N.T.S.

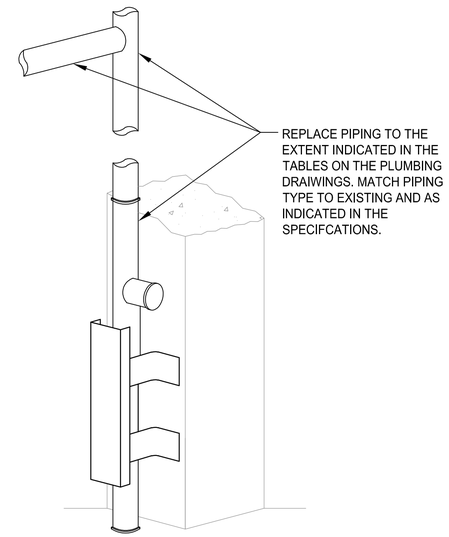

2 P-500 TYPICAL STANDPIPE AND STORM DRAIN RISER REPAIR DETAIL

N.T.S.

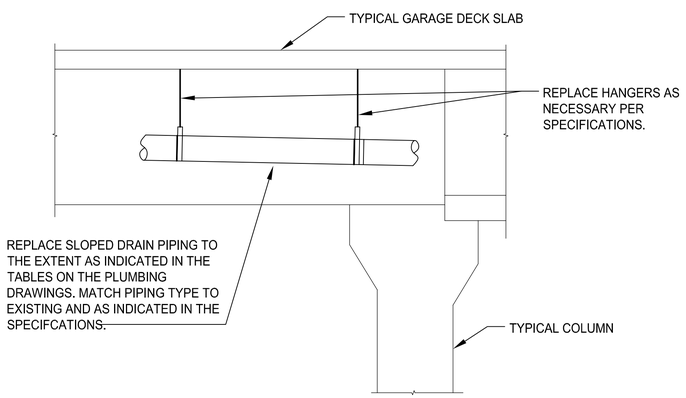

3 P-500 TYPICAL SLOPED DRAIN PIPING REPLACEMENT DETAIL

A Gannett Fleming/Parsons JOINT VENTURE

COMMONWEALTH OF VIRGINIA
01/25/2018
DEBDAS GHOSAL
No. 016382
PROFESSIONAL ENGINEER

"PROFESSIONAL CERTIFICATION: I HEREBY CERTIFY THAT THESE DOCUMENTS WERE PREPARED OR APPROVED BY ME, AND THAT I AM A DULY LICENSED PROFESSIONAL ENGINEER UNDER THE LAWS OF THE STATE OF MARYLAND."

LICENSE No. 30749

EXPIRATION DATE: 06-27-2018

- COMAR 09.23.03.10

DESIGNED	M.MCDONNELL	01/2018 DATE
DRAWN	M.MCDONNELL	01/2018 DATE
CHECKED	R.LAUFER	01/2018 DATE

REFERENCE DRAWINGS

NUMBER	TITLE

REVISIONS

DATE	NUM	DESCRIPTION
01/25/2018	0	FINAL SUBMITTAL

WASHINGTON METROPOLITAN AREA TRANSIT AUTHORITY

OFFICE OF DESIGN AND CONSTRUCTION
IRPG - FIXED FACILITIES

APPROVED 01/25/2018
JOHN PURDY DATE
ENGINEERING MANAGER

APPROVED 01/25/2018
MICHAEL J. McDONNELL / DEBDAS GHOSAL DATE
ENGINEER OF RECORD

REHABILITATION OF WMATA PARKING FACILITIES

TYPICAL PLUMBING REPAIR DETAILS

M NO.	CONTRACT NO.	SCALE	DRAWING NO.	SHEET NO.
M1301	FQ18064	NONE	P-500	503 of 503